09 File Copy

.805

U. S. DEPARTMENT OF COMMERCE
Lewis L. Strauss, Secretary
COAST AND GEODETIC SURVEY
H. Arnold Karo, Director

Radio Telemetry Applied to Survey Problems

RICHARD R. ROSS

TECHNICAL BULLETIN NO. 4
February 1959

UNITED STATES GOVERNMENT PRINTING OFFICE • WASHINGTON: 1959

For sale by the Superintendent of Documents, U.S. Government Printing Office, Washington 25, D.C. - Price 15 cents

Technical Bulletin Series

This series of Technical Bulletins was inaugurated to present to the personnel of the Coast and Geodetic Survey and to others the results of research and development in the various fields of the Bureau's activities. Since many of the bulletins deal with new practices and new techniques, the views expressed are those of the authors and do not necessarily represent final Bureau policy.

Technical Bulletin No. 4 describes the radio telemeter systems devised to solve two of the Bureau's problems for the remote recording of unattended instruments. One is a seismograph on a distant mountain and the other tidal current meters in a busy waterway.

COAST AND GEODETIC SURVEY TECHNICAL BULLETINS

No. 1. Aerotriangulation Adjustment of Instrument Data by Computational Methods. William D. Harris, January 1958 ..... Price $0.05

No. 2. Tellurometer Traverse Surveys. Lieutenant Hal P. Demuth, March 1958 ..... Price $0.15

No. 3. Recent Increases in Coastal Water Temperature and Sea Level—California to Alaska. H. B. Stewart, Jr., B. D. Zetler, and C. B. Taylor, May 1958 ..... Price $0.20

Coast and Geodetic Survey Technical Bulletins are available from the Superintendent of Documents, Government Printing Office, Washington 25, D. C.

Radio Telemetry Applied to Survey Problems

RICHARD R. ROSS, Electronic Scientist

U. S. Coast and Geodetic Survey

SOME of the work of the Coast and Geodetic Survey requires the collection of data over a period of time from instruments at remote locations. These data fall into one or more of the following categories: the records must be continuous, they may be intermittent but always available on demand, or they may be required simultaneously from more than one instrument.

Two of the problems encountered in the work of the Bureau that have been solved by radio telemeters are described in this Bulletin. The first is the recording at a magnetic observatory, on the outskirts of a city, of a seismograph located on a distant mountain. The second is the recording at a remote station of data from current meters suspended from several buoys anchored in a waterway.

Based on the successful solution of these two problems, studies are now being made to adapt this method to other phases of the Bureau's work.

SEISMOLOGICAL SIGNALS FROM A REMOTE POINT

At Tucson, Ariz., the seismograph station, operated in conjunction with the magnetic observatory, was found to be affected by disturbances from the growing city, particularly by the blasting at a quarry 2 miles away. Mount Lemmon, northeast of the city, was found to be an excellent location for the seismograph station. The instruments could be located on bedrock and have no interference from city traffic. The site chosen was within the Federal prison camp and 15 miles from the magnetic observatory.

Before the seismograph could be moved to the new station, however, a method had to be found by which the recording of the seismograph information could be transmitted to the observatory. In order to avoid using a cable, with its right-of-way and maintenance problems, a study of radio telemetry was made. The study indicated that such a method could be adapted for transmitting the complex low frequency wave of varying amplitude which was generated by the vertical seismometer pickup unit, over the required distance.

Of the several systems used for telemetering information, only two are described at this time. In an amplitude modulation with frequency modulation (AM/FM) system, the information to be relayed is used to amplitude modulate a subcarrier sine wave audio signal. The amplitude modulated signal is then used to frequency modulate a radio frequency carrier wave. This FM carrier wave is received at a remote point, detected, and the amplitude modulated subcarrier used to operate a recorder.

In a frequency modulation with frequency modulation (FM/FM) system, the information to be relayed is used to frequency modulate a subcarrier audio signal. The frequency modulated signal is used to frequency modulate a radio frequency carrier wave. The FM carrier wave is received at a remote point, detected, and the frequency modulated audio subcarrier signal used to operate a recorder.

A single FM subcarrier, or several such subcarriers, may be transmitted as a composite signal by either wire or radio to a receiving and recording station. The receiving and recording station simply uses Research and Development Board--Inter-range Instrumentation Group (RDB-IRIG) channel filters for each subcarrier and a discriminator for each channel is used to detect the intelligence voltage that is directly proportional to the original intelligence voltage. Its function is to convert the intelligence voltage produced by pickups or transducers into a standard RDB-IRIG signal whose variations in frequency are directly proportional to variations in the original intelligence voltage.

In 1954, an AM/FM system was designed by the Bureau's Electronics Laboratory. At first, this system seemed successful and some very good comparisons were run between Cheltenham, Md., and the Department of Commerce Building, Washington, D. C. It was later placed in service at Tucson. Due to the extreme high stability needed by the audio amplifiers in an AM/FM system, however, the supply regulation could not be made good enough when gasoline generators were used at the remote transmitting point.

Highly stable FM audio subcarrier oscillators and FM subcarrier frequency discriminators have since been developed on an Air Force contract for missile work. More recently a highly stable frequency meter with a 10 to 1 scale expansion feature was developed that appeared to be satisfactory for use as the receiving FM subcarrier frequency discriminator.

In October 1958, an FM subcarrier system using an FM subcarrier oscillator and an electronic frequency meter was installed at the Tucson

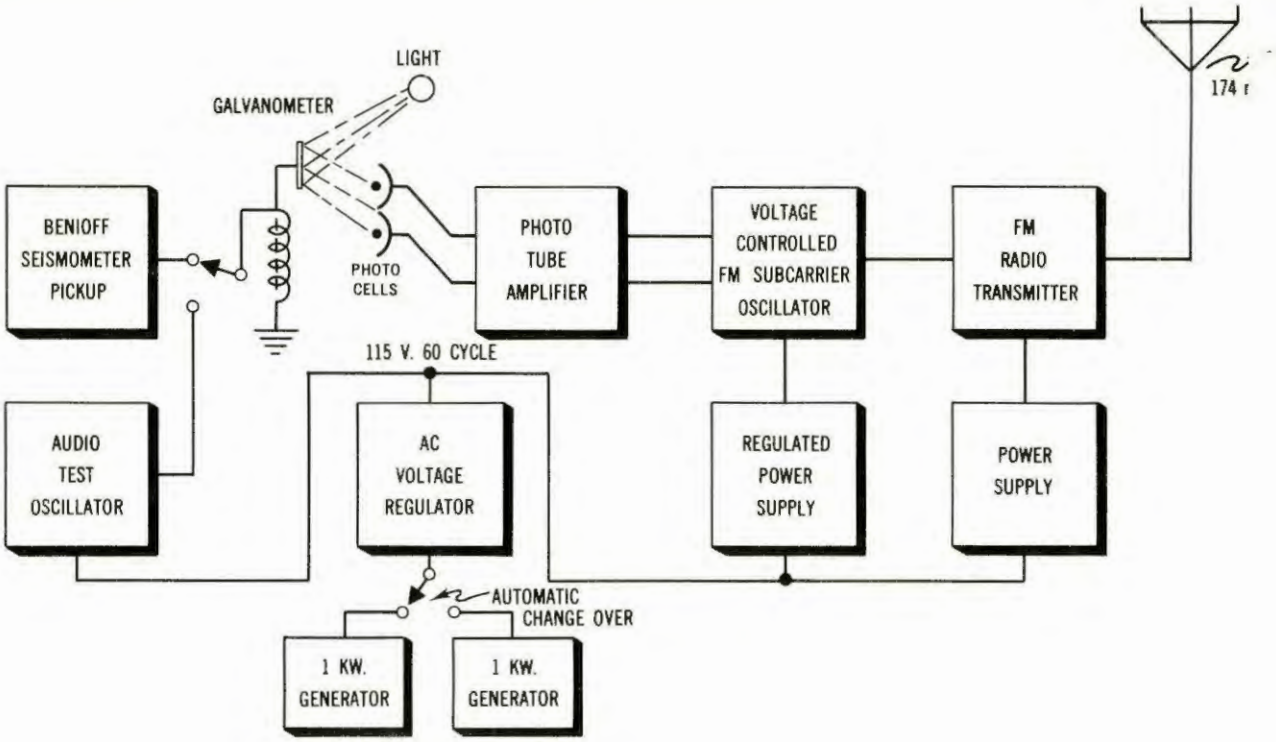

FIG. 1.--Remote transmitting equipment.

Observatory. Figures 1 and 2 show the transmitting and receiving ends of the telemeter circuit schematically. Figure 3 shows the record made at the seismograph station on Mount Lemmon and that received at the observatory in Tucson.

Remote Transmitting Equipment

A high sensitivity Benioff vertical seismometer is mounted in a vault high in the mountains east of Tucson. The pickup of the seismometer in the vault is connected to the equipment house some distance away by a coaxial cable. Through a switch either the pickup signal or a test signal from an audio test oscillator is fed to an ultra-sensitive galvanometer-phototube amplifier.[1]

The output of the phototube amplifier is fed into a voltage controlled FM subcarrier oscillator through cathode followers which form a balanced circuit. The oscillator input circuit was modified to match the balanced output from the phototube amplifier. This was done by disconnecting the normal chassis ground of the entire oscillator circuitry and building a regulated power supply that is isolated entirely from the chassis ground. This changes the input circuitry from an unbalanced to balanced circuit.

With zero signal from the pickup unit, the ligt beam is centered on the phototubes and zero differential signal is obtained at the phototube amplifier output. A center frequency control is adjusted to put the subcarrier oscillator *on frequency.* RDB-IRIG channel 6 (1700 cycles) was used.

With the test oscillator switched into the phototube amplifier and delivering a 0.1 cycle per second sine wave of sufficient amplitude to swing the light beam *full-on* first one and then the other phototube, the differential output is about plus or minus 8 volts. A sensitivity control on the subcarrier oscillator is adjusted so that the frequency of plus or minus 7.5 percent of the center frequency is obtained, in this case plus or minus 127.5 cycles.

These tests are observed on the recording equipment at the observatory. Radio communication (Handie-Talkie) is used at Tucson for these checks.

The output of the FM voltage controlled subcarrier oscillator is fed into the audio input circuit of an FM 30-watt base station. This transmitter with its associated power supply is duplicated in case of failure of a unit. Switching from one unit to the other is done manually. The power supply for this transmitter is a 60-watt

[1]A highly stable cathode-coupled amplifier for seismic recording by Roger M. Wilson and Laurie R. Burgess. *Bulletin of the Seismological Society of America*, October 1952.

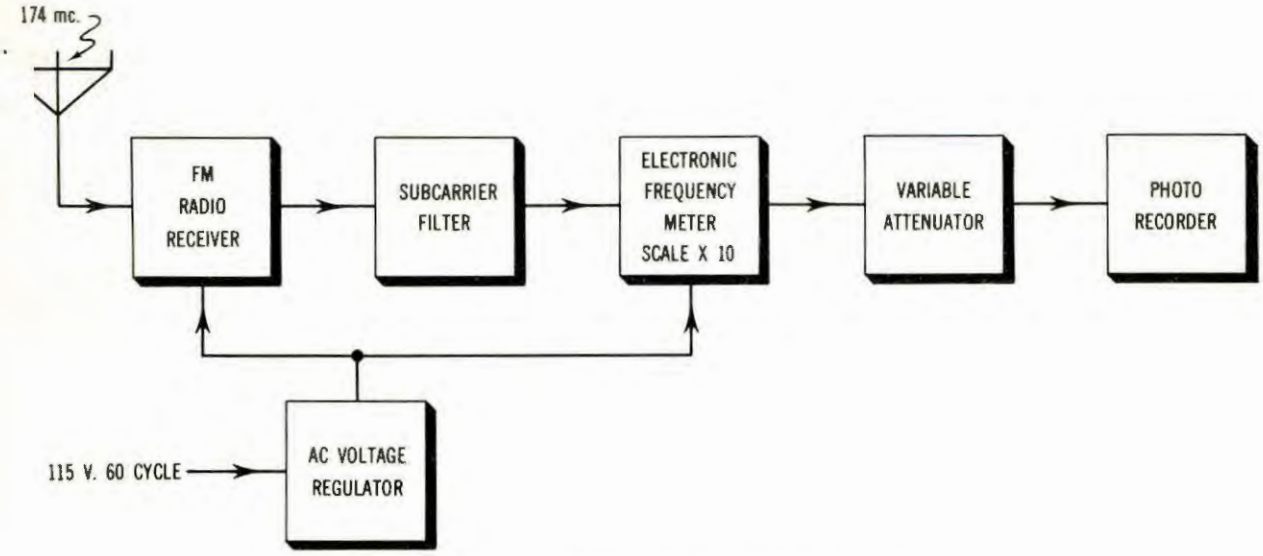

FIG. 2.--Observatory receiving and recording equipment.

unit which is oversized from a reliability standpoint. A radio frequency of 174 megacycles is used. A horizontally polarized yagi antenna on a tower is used to transmit the radio signals to the observatory in Tucson. The primary power units are 1 kw., 115-volt, 60-cycle generators. Butane gas was finally decided upon for fuel and seems to be economical and reliable. Two generators e used with automatic changeover in case of ilure.

Observatory Receiving and Recording Equipment

Radio signals are received at the Tucson Observatory on a horizontal yagi antenna and fed into a regular FM Sensicon base station receiver. A duplicate receiver is used with manual switchover in case of failure. This receiver delivers the FM subcarrier audio to a speaker for monitoring and to a channel 6 (1700 cycles) filter. The speaker is attenuated with an *L*-pad when not in use.

The output of this filter is then fed into an electronic frequency meter. A precision subcarrier discriminator is normally used for detection of the FM subcarrier frequency. The feature of the particular electronic frequency meter that makes it useable for this type of recording is the "times 10" scale expansion. Any portion of the scales can be expanded 10 times and centered on the panel meter. An external recorder movement is merely put in series with the visual meter movement by a plug in connection on the front panel. A 1,500-ohm resistor is used across the external recorder output connections to make up for the impedance that is removed when a plug is inserted. About 150,000-ohm total attentuation is used in series with the sensitive photo recorder movement. This attenuator is adjusted until the movement of a light beam on photosensitive paper matches the movement of a similar recording light beam from the galvanometer that supplies the light beam movement to the phototube amplifier at the transmitting end. At Tucson this adjustment is done by Handie-Talkie communication with the mountain site.

The upper frequency limit of the visual meter movement is cutoff at about 0.5 cycles. The upper frequency response of the recorder output is down 3 db at 20 cycles.

The FM transmitting subcarrier oscillator and the electronic frequency meter are made of very

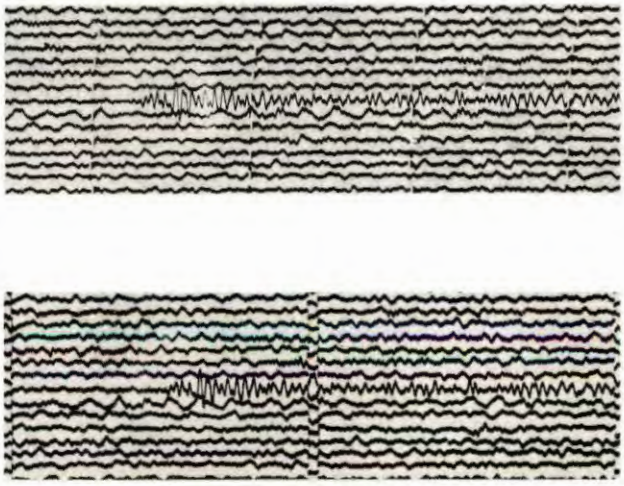

FIG. 3.--Seismograph record. Upper section shows data as transmitted from seismograph. Lower section shows data as received at the observatory.

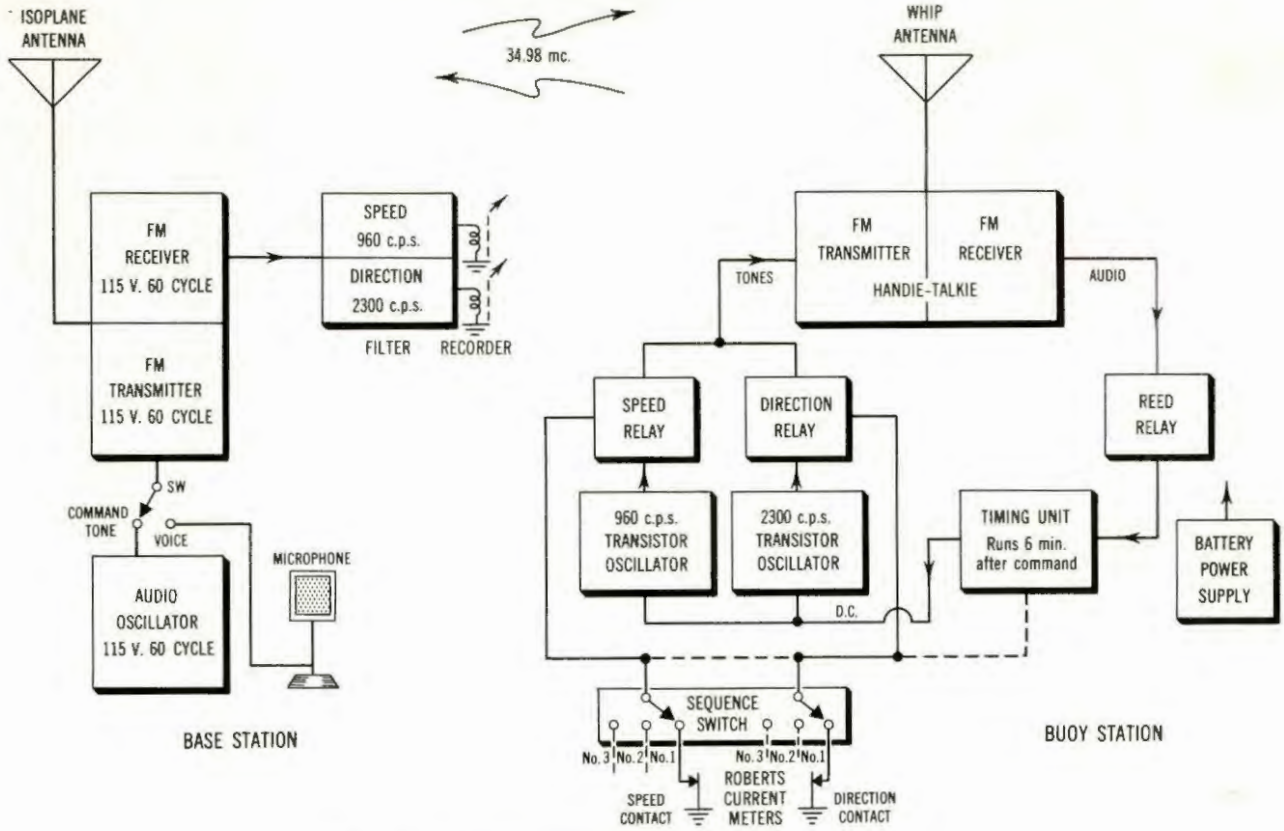

FIG. 4.—Radio telemeter system for tidal currents.

stable components that reduce drift problems to a minimum. Both units are readily serviceable.

Possible Future Changes

The Observer-in-Charge at Tucson suggested a possibility of putting in two additional subcarrier channels to record two additional seismological components.

At Tucson a 30-watt FM transmitter is used to carry the FM subcarrier data to the observatory. A completely transistorized transmitter with lower power output will soon be on the market. Eventually, such a system may be used to reduce the primary power needed. A seismic preamplifier made up of low noise transistor circuitry might possibly be used, instead of the present phototube amplifier, to amplify the very weak seismic signals from the Benioff seismometer. Such an amplifier has been described.[2] It would be necessary to have additional amplification between the unit described and the subcarrier oscillator input.

A Handie-Talkie transmitter might possibly be used at the transmitting site providing a duplicate transmitter and an automatic changeover in case of failure be provided. A system using these components would have a power consumption of an estimated 30 watts per hour.

TIDAL CURRENT METERS

The radio current meter was developed by Capt. E. B. Roberts of the Coast and Geodetic Survey in 1940, and has been in use by the Bureau since 1942. The meter measures both the speed and direction of the tidal currents. In operation, it is suspended from and electrically connected to an anchored buoy which houses a radio transmitter.

Prior to the development described in this paper, each buoy had its own radio frequency and was broadcasting continuously. To obtain the data from a particular buoy, the receiving and recording station had to tune the proper frequency which was critical and often noisy due to static or other interference. On some occasions, the speed and direction signals might merge or overlap causing some ambiguity in parts of the record.

In 1957, it was decided to develop a new telemeter system which would be less noisy and would use a single radio channel making it easier to obtain frequency assignments. It was also desirable to have the speed and direction components i

[2] A low noise transistorized seismic preamplifier by I. S. Sacks, *Journal of Geophysical Research*, June 1957.

corded separately so there is no possible ambiguity in the full 360° rotation of the current meter.

To achieve these requirements a very high frequency (VHF), frequency modulation (FM) channel was selected and amplitude modulation (AM) on-off audio signals used to carry the speed and direction tidal current intelligence. In this case, 34.98 megacycles was used. Figure 4 shows the telemeter circuits schematically.

Operation

The buoy station is triggered from the recording base station by a command tone that is different for each buoy and is in the range of 200 to 400 cycles per second. When a 5-second command is given, circuits in the buoy are automatically switched from receive to transmit. Speed and direction information, obtained from a Roberts current meter nearest the surface, is then transmitted for a 2-minute period. A sequence selector switch inside the buoy then switches on a second current meter at mid-level. Following the second 2-minute interval a third current meter near the bottom is switched in. Each meter is identified by a coded signal. At the end of the 6-minute period the timer automatically turns off the radio transmitter and turns on the radio receiver, ready for another command from the base station.

The first system was installed on the ship *Marmer*. Four buoys were rigged with whip antennas, Handie-Talkies, and sequence timing units. A complete run on four buoys could be completed in about 25 minutes. A run was started every 30 minutes.

FIG. 5.--Tidal current radio telemeter base station. Shown are the modified base station, microphone for normal communication, break-circuit chronometer for time marks, isoplane antenna for both transmitters, command signal and receiving current information with coaxial cable lead-in, and a chronograph using a waxed tape.

FIG. 6.--Modified base station. At top left is the audio oscillator used to supply the command tone for separate buoys. At top right is the filter used to separate the speed and direction tone signals received from the buoys.

Because this system is VHF, its range is basically line-of-sight. This does not necessarily mean the path between the ship base station and buoy has to be perfectly clear. It is possible for large obstructions to exist between the base station and buoy and good operation be maintained. To test this feature, the ship pulled into a docking area that was almost completely shielded by metal covered buildings and large steel beam superstructure. Operation was still maintained.

Base Station

The base station (figs. 5 and 6) consists of a 60-watt FM transmitter, an FM receiver, and a 115-volt a.c. power supply that is readily available on the commercial market. The unit is slightly modified for use with an audio oscillator to supply the command tone, and a filter chassis to select the speed and direction signals received from the buoy. These are mounted in the base station cabinet making the unit self contained. A switch is installed on the control panel so that either the command tone or microphone may be used. The unit can also be used for normal communication purposes.

A chronograph using a waxed tape is used to record speed, direction, and time marks.

Buoy Station

The buoy station (figs. 7 and 8) consists of a Handie-Talkie, timer chassis, mobile whip an-

FIG. 7.--Components for a buoy unit. Shown are a Handie-Talkie receiver-transmitter, a sequence timing unit, a 20-ampere hour, 12-volt nickel cadmium battery, and a Roberts low velocity current meter.

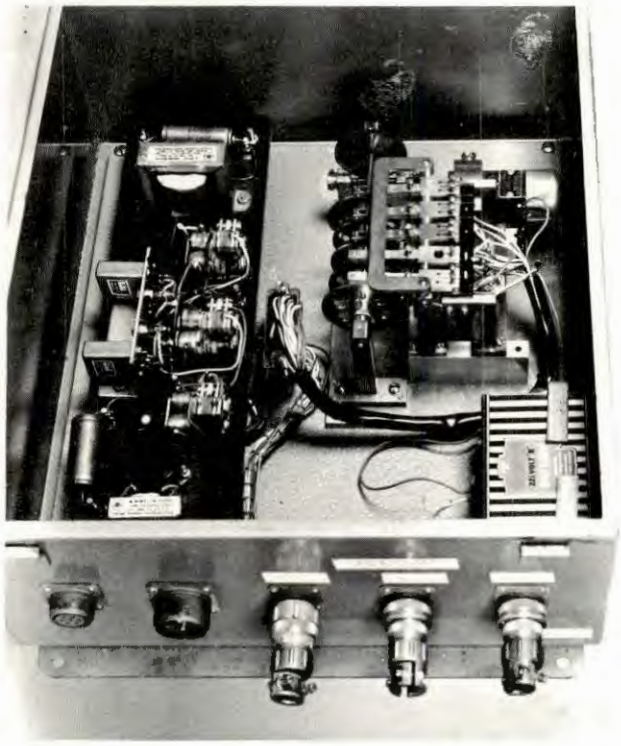

FIG. 8.--Buoy sequence timing unit. At upper right is the sequence timer which uses a cam-lever-micro switch arrangement. The permanent magnet driven motor is at the extreme upper right. At bottom left is the reed frequency sensitive relay which responds to command tones. At center left are the 960 cycles and 2,300 cycles transistor oscillators that supply the audio signal that is keyed into the Handie-Talkie microphone input by the Roberts current meters. The three plug fittings at lower right are connections for three current meters.

tenna, dry battery supply, and a proper number of Roberts current meters for the different lev of tidal current information to be recorded.

The Handie-Talkie has a radio frequency power output of 6 watts when used with dry batteries (8 watts when used with a transistorized power supply). The transmitter portion uses instant heating tubes and one audio transistor. The receiver portion is transistorized except for three radio frequency low drain tubes. Very little current is drawn from the supply batteries when the unit is in the receive position which is about 80 percent of the time for normal operation. The power consumed when on the receive position averages about 3/4 watt. When transmitting the power drain is about 26 watts.

The timer chassis has a sequence timing unit which was designed and fabricated in the Bureau. A 0.115 ampere, 12-volt permanent magnet motor is used to drive the mechanism upon command from the base station. Included on the timer chassis are relays, coupling transformer, coupling capacitors, and two transistor audio oscillators that were especially designed for use in the buoy. Research and Development Board--Inter-range Instrumentation Group (RDB-IRIG) Channel 4 (960 cycles) is used to carry the speed intelligence. Channel 7 (2300 cycles) is used to carry the direction intelligence.

The audio oscillators run continuously during the 6-minute command cycle. Their outputs are connected to the Handie-Talkie microphone in circuitry through relays that are keyed by the speed and direction contacts in the current meter.

The command reed relay is a vibrating tuned reed that makes 5 percent contact when a voltage at resonant frequency is fed to it from the Handie-Talkie receiver, and originated by the audio oscillator, upon command, at the base station. A circuit with a time constant of about 1 second is used in the output of this relay. This is to avoid operation on low frequency voice components when the base station is used for normal communication purposes. After the command tone is given by the base station, it takes about 5 seconds for the sequence motor to drive the timing mechanism to a point where the Handie-Talkie receiver is turned off and the transmitter turned on thus starting a telemeter sequence.

The antenna is an easily mounted unit requiring no guy wires. It is a regular quarter wave length, stainless steel antenna rod with a universal spring base swivel mount and coaxial lead-in cable. This antenna seems to stand up well under the constant motion of the buoy.

Conclusion

At present, dry batteries are being used to supply operating power in the buoy. One compa

also makes a transistorized power supply for use :h the Handie-Talkie. With this the primary ver is from a 12-volt storage battery. At present the current buoy is not designed to contain a storage battery. A vented separate compartment would have to be built into the buoy. A fully charged 12-volt, 100-ampere hour storage battery would run a buoy over 100 hours at the present 6 minutes on, 24 minutes off transmitting duty factor.

Although the system described was designed specifically for the remote measurement of tidal current information, it is easily adaptable to the measurement of other quantities by the substitution of different methods for modulating the audio transistor oscillators.

As an example, it could be very easily applied to area type tidal surveys. Tidal information could be collected at the base station for a great number of tide stations.

U.S. GOVERNMENT PRINTING OFFICE : 1959 O - 505186