U.S. DEPARTMENT OF COMMERCE
Luther H. Hodges, Secretary
COAST AND GEODETIC SURVEY
H. Arnold Karo, Director

The Earth as Viewed From a Satellite

ERWIN SCHMID

TECHNICAL BULLETIN NO. 20
April 1962

UNITED STATES GOVERNMENT PRINTING OFFICE • WASHINGTON: 1962

For sale by the Superintendent of Documents, U.S. Government Printing Office, Washington 25, D.C. - Price 20 cents

Technical Bulletin Series

This series of Technical Bulletins was inaugurated to present primarily to the personnel of the Coast and Geodetic Survey and incidentally to others technical information related to the Bureau's scientific and technical activities. Since many of the bulletins deal with new practices and new techniques, the views expressed are those of the authors and do not necessarily represent final Bureau policy.

Technical Bulletin No. 20 describes several methods for drawing the curves representing the meridians and parallels on the earth as they would appear from an arbitrary point above its surface. In the first part of the bulletin only the barest elements of descriptive geometry are used, in the second part the analytical theory of the projection is developed, while in the third part some theorems from analytic geometry, used in the construction, and proofs are touched upon.

COAST AND GEODETIC SURVEY TECHNICAL BULLETINS

No. 1. Aerotriangulation Adjustment of Instrument Data by Computational Methods. William D. Harris, January 1958 ..... Price 5¢

No. 2. Tellurometer Traverse Surveys. Lieutenant Hal P. Demuth, March 1958 ..... Price 15¢

No. 3. Recent Increases in Coastal Water Temperature and Sea Level--California to Alaska. H. B. Stewart, Jr., B. D. Zetler, and C. B. Taylor, May 1958 ..... Price 20¢

No. 4. Radio Telemetry Applied to Survey Problems. Richard R. Ross, February 1959 ..... Price 15¢

No. 5. Raydist on Georges Bank. Captain Gilbert R. Fish, April 1959 ..... Price 25¢

No. 6. The Tsunami of March 9, 1957, as Recorded at Tide Stations. Garrett G. Salsman, July 1959 ..... Price 15¢

No. 7. Pantograph Adjustment. G. C. Tewinkel, July 1959 ..... Price 5¢

No. 8. Mathematical Basis of Analytical Aerotriangulation. G. C. Tewinkel, August 1959 ..... Price 15¢

No. 9. Gravity Measurement Operations in the Field. Lieutenant Commander Hal P. Demuth, September 1959 ..... Price 15¢

No. 10. Vertical Adjustment of Instrument Aerotriangulation by Computational Methods. William D. Harris, September 1959 ..... Price 10¢

No. 11. Use of Near-Earth Satellite Orbits for Geodetic Information. Paul D. Thomas, January 1960 ..... Price 45¢

No. 12. Use of Artificial Satellites for Navigation and Oceanographic Surveys. Paul D. Thomas, July 1960 ..... Price 25¢

No. 13. A Singular Geodetic Survey. Lansing G. Simmons, September 1960 ..... Price 15¢

No. 14. Film Distortion Compensation for Photogrammetric Use. G. C. Tewinkel, September 1960 ..... Price 10¢

No. 15. Transformations of Rectangular Space Coordinates. Erwin Schmid, December 1960 ..... Price 15¢

No. 16. Erosion and Sedimentation, Eastern Chesapeake Bay at the Choptank River. G. F. Jordan, January 1961 ..... Price 40¢

No. 17. On the Time Interval Between Two Consecutive Earthquakes. Tokuji Utsu, February 1962 ..... Price 10¢

No. 18. Submarine Physiography of the U.S. Continental Margins. G. F. Jordan, March 1962 ..... Price 20¢

No. 19. Analytic Absolute Orientation in Photogrammetry. G. C. Tewinkel, March 1962 ..... Price 20¢

Coast and Geodetic Survey Technical Bulletins are available from the Superintendent of Documents, Government Printing Office, Washington 25, D. C.

The Earth as Viewed From a Satellite

ERWIN SCHMID, Mathematician

U.S. Coast and Geodetic Survey

THE ADVENT of manned space flight renews interest in the question of what the earth looks like from an arbitrary point above its surface. Drawing the curves to represent the meridians and parallels of the earth, a necessary prerequisite in the construction of any map, can be accomplished in accordance with the basic principles of descriptive geometry, but the literature on the subject is rather sketchy and limited to special cases due, no doubt, to the arduousness of point-by-point construction.

In the first part of this paper the attempt is made to show how this grid can be drawn in the most general case, using only the barest elements of descriptive geometry and a minimum of individual point projections. Part II develops the analytical theory of the projection directly from the synthetic construction of Part I. Formulas are given for computing the plane coordinates of the grid intersections and for the defining characteristics of the ellipses representing the grid lines. Part III touches on some theorems from analytic geometry used in the constructions and proofs.

I. CONSTRUCTION OF THE PERSPECTIVE GRID BY SYNTHETIC METHODS

1. The Problem From the Point of View of Descriptive Geometry

The grid formed by the meridians and parallel circles of a sphere, as seen along a line perpendicular to the surface of the sphere at the pole or the equator and at a distance infinite relative to the dimensions of the sphere, are the so-called normal aspects of the orthographic polar and equatorial projection, familiar to students of mechanical drawing. Figure 1 shows these two basic aspects of the sphere which will be used to develop, by the methods of descriptive geometry, the general, oblique, projective aspect of the earth's geographic grid as seen by the eye of an observer, or a camera, from, say, a satellite at a given arbitrary point above the earth's surface. The principal aim will be to determine minimum defining characteristics of the curves that form the grid, in order to avoid point-by-point constructions depending on auxiliary curves, such as the meridian ellipses in the front (equatorial orthographic) view of figure 1, which are themselves point-by-point constructions, hence subject to errors which will be propagated in subsequent projections to the oblique side view. The purpose of this figure is merely to present the problem and to show the basic curves involved even though their construction may not be needed for the desired perspective view.

2. Orthographic Front and Top View of the Geographic Grid

The front view shows the grid as seen in parallel projection, from a point infinitely distant and on a line passing through the center of the sphere and a point on the equator, such that both these points project into the point O_F. The meridian plane perpendicular to the plane of the paper has trace $N_F S_F$ which is also the trace of the polar axis. N_F is the trace of the north pole, and the circle about O_F with radius $O_F N_F$ is the meridian whose longitude differs by 90° from that of the meridian $N_F S_F$. The plane of the equator has for its trace the line through O_F perpendicular to $N_F S_F$; the other parallels of latitude are lines parallel to the equator, spaced such that the arc, intercepted on the circular meridian in the plane of the paper by the parallel and the equator, is equal to the latitude of the parallel in question. Thus the horizontal lines in the front view represent the parallels of latitude $\varphi = 0°, \pm 15°, \pm 30°, \ldots$ up to 90° (the poles), and are obtained by dividing each quadrant of the outline meridian circle into 6 equal arcs by means of dividers.

In the top (polar) view the eye is likewise at an infinite distance and on the extension of the polar axis above the north pole whose image N_T now coincides with that of the polar axis. The meridian planes all contain this axis and appear as a bundle of straight lines through the center N_T. The parallels appear in true length and shape as a family of circles concentric at N_T, the diameter of each circle being the length of the trace of the parallel in the front view. The angle between the meridian lines in the top view is the true longitude difference; with each quadrant in the top view divided into 6 equal parts the meridians are therefore separated by 15° of longitude.

In order to draw the meridians in the front view and thus complete the grid of the basic figure it is merely necessary to remember from geometry that every parallel projection of a circle is an ellipse including, as limiting cases, the circle itself and a line segmert (its diameter). From the symmetry of the figure and the fact that all meridians pass through the poles it follows that the center of each meridian ellipse in the front view is the point O_F and that the line $N_F S_F$ is in each case the major axis. The minor axis lies along the line representing the equator, its end points being determined by parallel projection from the top view onto the trace of the equator, of the intersections of the straight line meridian with the outline circle. Having determined the four vertices of the ellipse, the curve can be drawn, using proportional dividers as described in section 13.

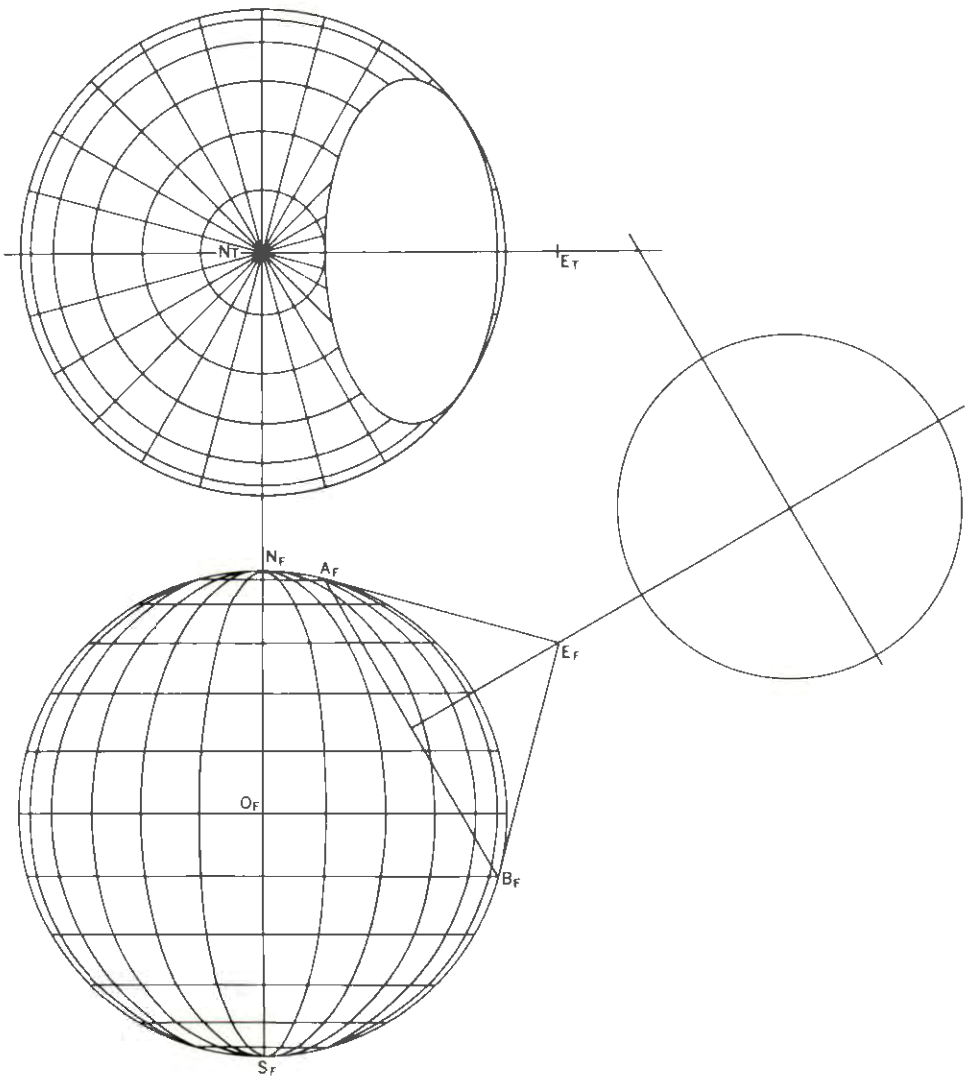

Figure 1

3. *The Oblique Side View of the Intersection of Sphere and Cone of Sight*

All this is elementary descriptive geometry and sketched here merely to fix the ideas. Consider, next, a point E_F at a given distance from, and directly over, a given point on the surface of the sphere. In figure 1 the latitude of this point is 30° N. and its meridian plane is assumed, for convenience, to be the plane of the paper in the front view. The corresponding point in the top view is E_T. From E the eye can see that portion of the sphere enclosed by a right circular cone with vertex E and tangent to the sphere. The circular intersection of this cone and the sphere lies in a plane perpendicular to the axis O_FE of the cone, its trace in the front view being the chord A_FB_F. By parallel projection in the direction O_FE_F this circle with diameter A_FB_F appears in its true shape as seen from E and forms the outline of the visible portion of the earth's surface. It is our purpose to draw within this circle the geographic grid of meridians and parallels as they would appear from E if they were actually etched on the surface of the sphere. This, it must be borne in mind, will be a perspective view or projection in contradistinction to the auxiliary front and top views which are, as usual, parallel or orthographic projections. The intersection of the cone of sight and the sphere is also shown in the top view because we shall have occasion to refer to it in the following, although we shall circumvent its use in our constructions for the reasons stated at the outset. It is an ellipse whose minor axis lies on N_TE_T, the ends being projections of A_F and B_F, and whose major axis has the length of chord A_FB_F.

4. *The Projective Projection of Points on the Sphere*

In figure 2 let P_F be the arbitrary point on the visible spherical cap whose image in the oblique perspective view, the side view, is sought. The corresponding point P_T in the top view is found in the usual way, by parallel projection. The eye, or the camera lens, "projects" the point P along E_FP_F to C_F on plane AB which is parallel to the camera plate. This point C_F is therefore where P is "seen," and projection parallel to O_FE_F will give the ordinate y of the image of P. In the top view the line E_TP_T represents the same line in space as line E_FP_F and the image must therefore lie on E_TP_T. Hence the point in the top view corresponding to the interior point C of the front view is C_T, the intersection of E_TP_T and the vertical from C_F. The distance $C_T'C_T$ from the central meridian plane to C_T is therefore the abscissa x of the image, or map, of P--completing the transfer of the point P on the sphere to its full scale visual image. It should be noted that the construction is carried out entirely with lines and circles, and the attainable accuracy of construction is limited only by the precision of the drawing instruments.

It would now be possible to choose a number of other points on the straight line representing the parallel of P_F in the front view and proceed to plot this parallel in the perspective view point by point, using the front and top views for each one. Similarly, by choosing additional points P_T on the straight line meridian of P in the top view the meridian of P could be completed. This procedure, however, is tedious and unsatisfactory in other respects. We seek therefore more elegant methods of constructing these curves, both with and without computations, that is to say analytically and synthetically.

5. *Characteristics of the Projected Grid Lines*

The completed meridian and parallel of P are shown in figure 2 to illustrate the discussion. Some features common to all such curves are at once apparent.

(1) Each curve is the intersection with plane AB of the cone whose vertex is E and whose base is a circle on the sphere, and is therefore a conic section.

(2) Furthermore, since the tangent cone to the sphere contains all of these cones its projection, the circular outline of our map, must enclose all of these sections. They are therefore bounded, hence ellipses.

(3) In aspects, such as figure 2, that do not include a visible pole each curve in the visible portion of the sphere crosses (twice) the plane AB separating the visible portion from the invisible and therefore all curves have points in common with the circular boundary of the map.

(4) At such points the curves must be tangent to this circle since by (2) they cannot leave (cross) it. These points of tangency are therefore the end points of the two arcs constituting the ellipse, one of which is the visible and the other the invisible branch of the meridian or parallel.

(5) Each of the meridian ellipses passes through two fixed points, the images of the north and south poles which lie on the y-axis, the trace on the map of the central (zero) meridian.

We conclude, therefore, that the visible meridians are a family of ellipses which are tangent to the boundary circle exactly twice and which have two fixed points in common. The parallels also form a family of tangent ellipses but without a fixed point condition. However, the family of parallel ellipses has a further geometric property which we shall see presently. In either case, after having determined the points of tangency on the outline circle with a simple and precise construction the vertices of the ellipse in question can be readily found, and the curve therefore constructed by any of a number of convenient methods.

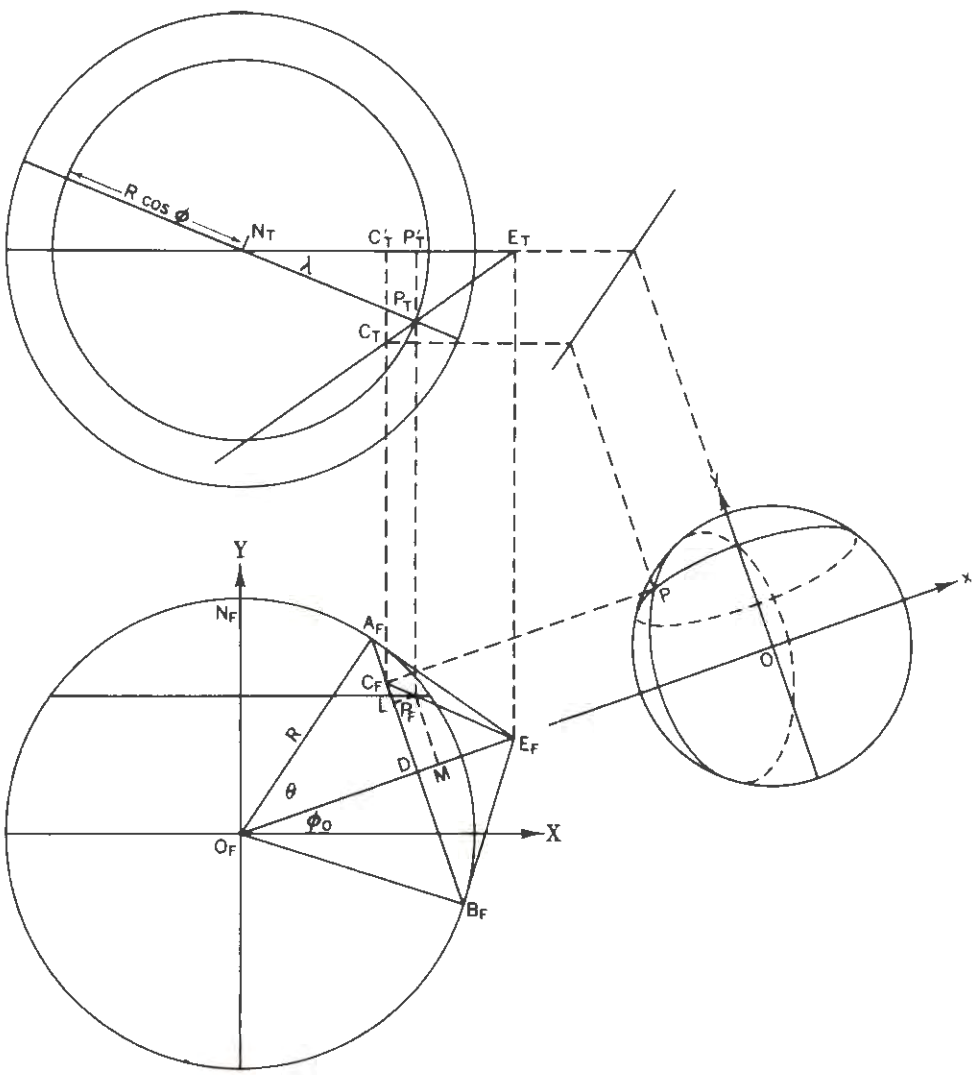

Figure 2

6. *Construction of the Parallel of Latitude*

We consider first the construction of a given straight line parallel $L_F K_F$ (fig. 3) intersecting $A_F B_F$ at C_F. Its latitude ϕ is the angle in the front view formed by $L_F O_F$ and the trace of the equator. The point C_F projected parallel to $O_F O$ intersects the outline circle at C and C' which are the points of tangency. Since the points C and C' are located symmetrically with respect to the map of the central meridian OA, the minor axis of the ellipse will lie on OA and the major axis will be parallel to the chord CC', in accordance with the theorem: "If a circle has double contact with a conic the chord of contact is parallel to one or other of the axes."[1] When the circle encloses the conic, as in the present case, the chord is parallel to the major axis. The points of the ellipse on OA, and hence the extremities of the minor axis, are L and K, the map images of L_F and K_F. K and L are determined from K_F and L_F by the general method of section 4, and the center M of the ellipse is located by bisecting the segment KL. The latitude ellipse is now completed by the method illustrated in figure 4, an abstract from figure 3.

Our given data at this point consists of the major axis, the two vertices K and L on the minor axis, the center M, the chord CC' parallel to the major axis, and the points C and C' at which the ellipse is tangent to the outline circle. The tangents at these points are also tangents of the circle and are therefore constructed perpendicular to the radii OC and OC', intersecting the major axis at P and P'. Erect a perpendicular through C (or C') to the major axis MP. A circle with diameter MP intersects this perpendicular at D, and the circle with center M and radius MD is the major auxiliary circle of the ellipse, cutting the

[1] Elementary Treatise on Conic Sections by C. Smith. Macmillan, New York, 1910. p. 252.

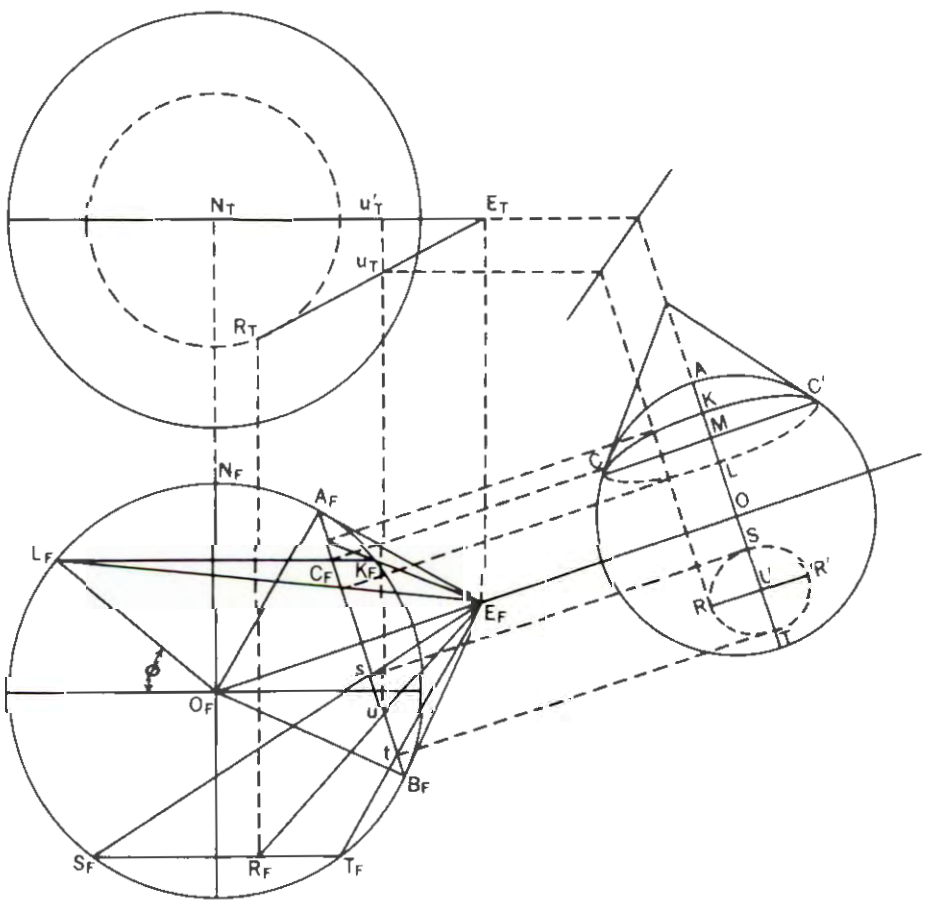

Figure 3

major axis in V and W, the vertices on the major axis. MD cuts CC' in S, and MS is the radius of the minor auxiliary circle that cuts the minor axis in the vertices L and K. Since these latter points were part of the given data it is seen that the construction could have proceeded in reverse order, i.e., construct the circle with radius ML, intersect it with CC' for S and produce MS to intersect the perpendicular through C for D. The former method, however, is preferable, especially when MS is small since it does not involve the extrapolation of MS to D. Furthermore this method is applicable when, as in the case of the longitude ellipses, only the center M, but not the vertices L and K, are given.

The above construction is based on the well-known property of the ellipse, that a tangent to the ellipse and the tangent to the auxiliary circle at the corresponding point of the circle intersect on the axis of the ellipse.

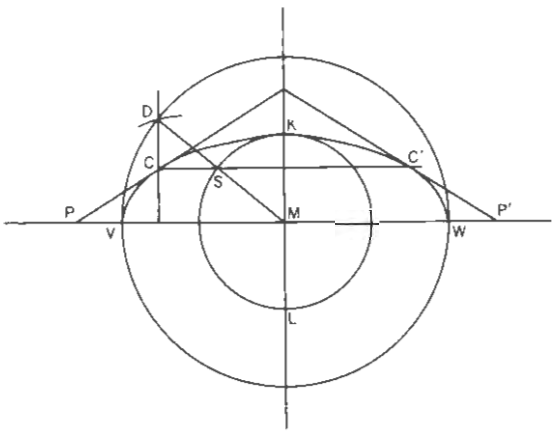

FIGURE 4

The complete ellipse, or the visible portion of it between the points of tangency with the outline circle, can now be drawn by one of the methods suggested in part III. It may be noted in figure 6 that one of the parallels in the map degenerates into a straight line. This is characteristic of all perspective views in which neither of the poles is in the field of view. It is the parallel of the front view which, if produced, would pass through the observation point E_F, and the visible arcs of the latitude ellipses on either side are concave with respect to it.

The discussion up to this point has been limited to aspects in which neither pole is visible. In cases where one of the poles is in the field of view the plane $A_F B_F$ intersects the polar axis, and parallels of latitude sufficiently close to the pole are not intersected by $A_F B_F$. Hence the ellipses representing these parallels will nowhere be tangent to the outline of the map, so that a modification of the above procedure is necessary. The situation is analogous to the invisible parallels in the case we have been discussing and the necessary procedure can be illustrated by constructing the parallel $S_F T_F$ of figure 3. The vertices S, T on the minor axis are found, as before, by way of points s and t on $A_F B_F$. The midpoint U of ST is the center of the ellipse and the major axis is the perpendicular to ST through U. To find the extremities of the major axis project u, the midpoint of st, from E_F to the parallel $S_F T_F$ into R_F and onto the trace of the parallel in the top view into R_T. Intersect $R_T E_T$ with the parallel to $N_F N_T$ through u, cutting $R_T E_T$ in u_T and $N_T E_T$ in u'_T. The length of the segment $u_T u'_T$ is the semimajor axis UR, thus fixing the four vertices of the latitude ellipse. It can be seen that this method is perfectly general and could be used, if preferred, for all latitude ellipses. The method does, however, introduce an additional source of error, the use of both front and top view, whereas the first method uses the front view only.

7. *Construction of the Meridians*

The points of tangency of the ellipses that represent the meridians in the perspective view correspond again to the intersections of the meridians on the sphere with the base of the tangent cone of sight. These points can therefore be derived, either from the intersections of the straight line $A_F B_F$ and the elliptical meridians shown in the front view of figure 1, or from the intersections of the elliptical section of the cone and sphere in the top view of the same figure with the family of straight line meridians. For a rough sketch it would be sufficient to draw this elliptical section into the top view which would then immediately yield the necessary points of tangency for any desired visible meridian. For a careful construction, however, it is advisable to determine directly each point of the elliptical section as needed. This requires the construction: Given the defining elements of an ellipse--say, the four vertices, or the two auxiliary circles and the directions of the principal axes; to find the intersections of the ellipse with an arbitrary given line. This construction is explained in section 16.

In figure 5 the method is illustrated using the top view although in certain cases the front view would give a more positive intersection. If, for instance, the eventual projection of the intersection from the top to the perspective view should be at a distance close to the radius of the outline circle of the perspective view, then the arc of this circle and the line of projection would intersect at an angle near $0°$. In this case the projection from the front view would intersect the arc at nearly a right angle and would, therefore, be preferable.

Let the meridian to be constructed be the indicated diameter in the top view. The section of plane AB in the top view is an ellipse whose minor axis lies on $N_T E_T$, the plane of the central meridian. A_T and B_T are the vertices of the minor axis, and bisection of this segment gives the center C_T. The major axis lies along the projection line $C_T C_F$, its length being that of $A_F B_F$. On the segment JC_T, the intercept of the meridian on the semi-major axis, determine point K so that $KC_T : JC_T = C_T A_T : C_T C'_T$. This is done most conveniently with proportional dividers, but in the absence of these can be accomplished with a ruler by extending the meridian and drawing the tangents to the auxiliary circles as indicated in the top view. $N_T K$ intersects the minor auxiliary circle in H'_T and G'_T. Parallels to the major axis through G'_T and H'_T intersect the meridian in G_T and H_T, the sought intersections, and the central meridian in G''_T and H''_T. Parallels to NS at distances $H_T H''_T$ and $G_T G''_T$ respectively intersect the outline circle of the perspective view in H and G, the points of tangency.

The tangents to the circle at H and G, intersecting at T, and obtained by erecting perpendiculars through H and G to the radii EH and EG respectively, are again tangent to the ellipse as well. The line TE is the perpendicular bisector of the chord HG and hence the minor axis of the ellipse, from the theorem quoted in section 6. The poles N and S should also be projected from the front view since these two points are common to all meridians. With these four points and two tangents the projection of the meridian ellipse is now fixed, in fact overdetermined; but these are all critical data for the curves and should be used in the construction.

Next, draw a line through one of the poles, say S, parallel to the minor axis ET. On this line we will find the other extremity, D, of the chord of the ellipse, using the theory of the Pascal line. (See section 19.) The perpendicular bisector of SD will then be the major axis and we can proceed with the construction of the ellipse as in section 6. There are a number of different possible procedures to effect this construction, such as the choice of poles just mentioned, but these choices will in most cases be obvious as well as immaterial.

Extend the line connecting S and one of the points of tangency, say H, to intersect the tangent TG at the other point in M. The line joining M and L, the intersection of the chord HG and the chord SD, cuts the tangent TG in R and is the Pascal line of the combination. The intersection of GR and SD is the required point D.

Due to the symmetry of the perspective view with respect to the plane of the central meridian, every meridian λ constructed yields at the same time the construction of the corresponding meridian $-\lambda$ by reflection through the axis NES.

This completes the synthetic, or purely geometric, construction of the grid of the sphere as viewed normally from an arbitrary height above an arbitrary point on its surface. Figure 6 shows, on an enlarged scale, the completed side view of figure 1. The dashed (invisible) arcs of the various ellipses are included in this figure as a matter of interest and do not, of course, form any part of the camera picture. By themselves, the dashed grid lines form a map of the invisible major portion (not realizable in its entirety in our space of three dimensions) of the surface of the sphere, often referred to as the external projection. As shown in the next section, this synthetic approach readily yields the transformation equations needed for an analytical treatment of the projection.

II. ANALYTICAL TREATMENT OF THE PROBLEM

8. *Plane Coordinates of a Point*

In figure 2 let E, the viewing point, be given in latitude φ, longitude 0, and at distance h above the surface of the sphere of radius R, so that $O_F E_F = R + h$. Let the trace of the equator in the front view be the X axis of a rectangular coordinate system in the plane of the front view, with the center O_F of the circular trace of the meridian of E_F, the zero meridian, as origin and $O_F N_F$ as Y axis. A_F and B_F are on the intersection of the tangent cone with the sphere and $E_F A_F O_F$ is therefore a right angle. The angle $E_F O_F A_F$ is designated

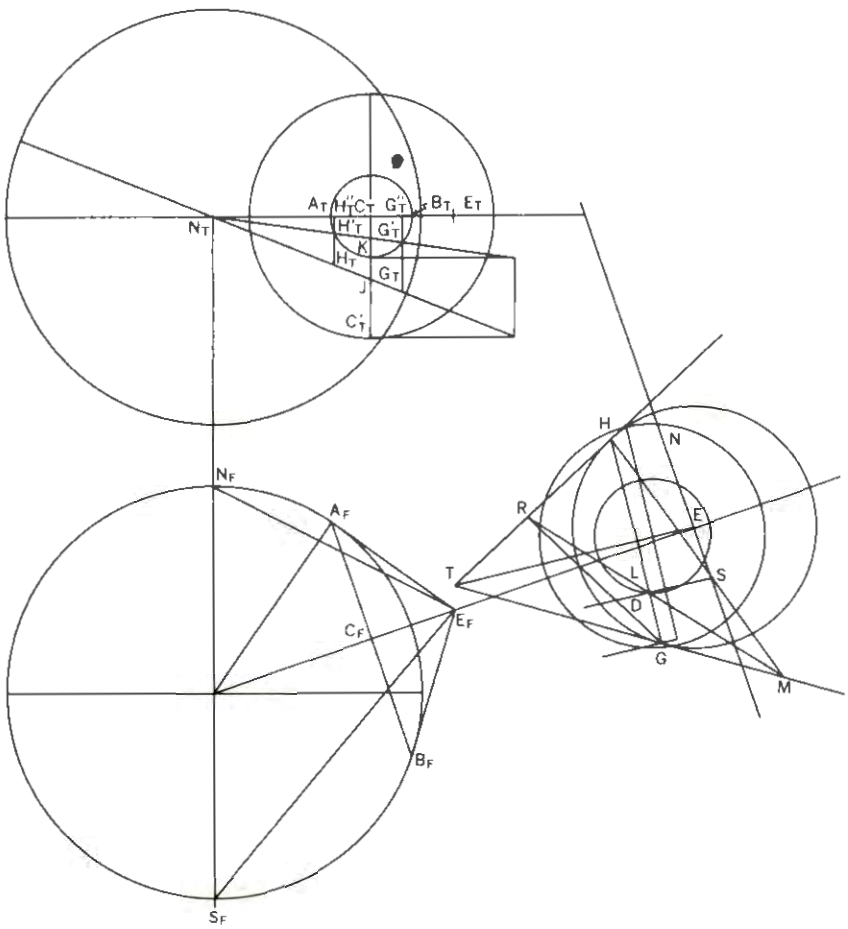

Figure 5

θ and its cosine is $A_F O_F / O_F E_F$, or

$$\cos \theta = R/R + h. \tag{8.1}$$

This definition replaces, for convenience, the parameter h with θ. The length of the normal OD to line AB is $R \cos \theta$ and its inclination is φ_0. The normal, or perpendicular, form of the equation of AB is therefore

$$X \cos \varphi_0 + Y \sin \varphi_0 - R \cos \theta = 0 \tag{8.2}$$

Similarly, the equation of OE is

$$X \sin \varphi_0 - Y \cos \varphi_0 = 0 \tag{8.3}$$

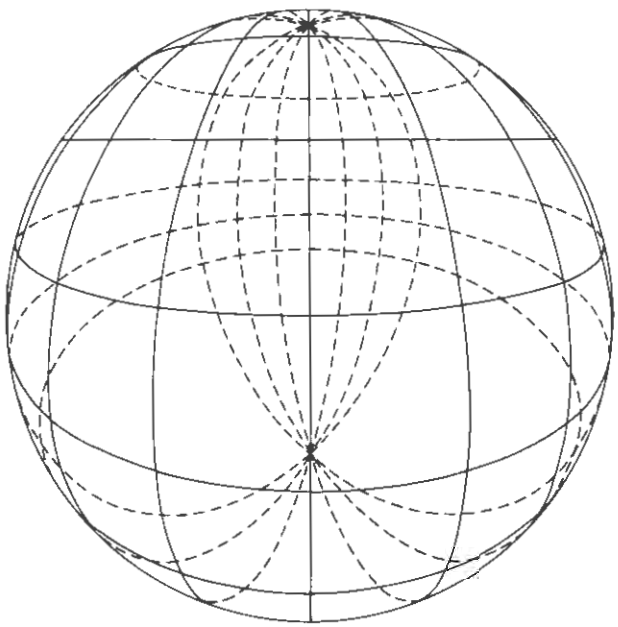

FIGURE 6

Assume an arbitrary point P on the sphere with given latitude φ, and longitude λ with respect to the meridian plane of E. The ordinate Y_P of P_F is constant for all points that lie on the given parallel φ since their locus is the straight line through P_F parallel to the X axis. By considering the end point of this chord it is apparent that Y_P is $R \sin \varphi$, and that half the length of the chord which, by construction, is also the radius $N_T P_T$ in the top view, is $R \cos \varphi$. The longitude λ appears undistorted in the top view as $< P_T N_T E_T$. The X coordinate of P_T, hence also of P_F, is therefore $R \cos \varphi \cos \lambda$. These coordinates of $P_F (R \cos \varphi \cos \lambda, R \sin \varphi)$ substituted in (8.2) and (8.3) yield the perpendicular distances LP_F and MP_F from $A_F B_F$ and $O_F E_F$ respectively to P_F:

$$\begin{aligned} LP_F &= R (\cos \varphi_0 \cos \varphi \cos \lambda + \sin \varphi_0 \sin \varphi - \cos \theta) \\ MP_F &= - R (\sin \varphi_0 \cos \varphi \cos \lambda - \cos \varphi_0 \sin \varphi) \end{aligned} \tag{8.4}$$

Assuming a second coordinate system (x,y) in the plane of the map (the oblique side view), with O as origin and the axes as indicated in figure 2, it follows from the method of con-

struction of the map point P that its y coordinate y_p is the distance DC_F, and from similar triangles

$$DC_F = \frac{MP_F}{ME_F} \cdot DE_F = \frac{MP_F \cdot DE_F}{DE_F - LP_F}.$$

Since $DE_F = A_F D \tan\theta = R \sin\theta \tan\theta$,

$$y = DC = R\sin\theta\tan\theta \quad \frac{R(\cos\varphi_0 \sin\varphi - \sin\varphi_0 \cos\varphi \cos\lambda)}{R(\sin\theta \tan\theta - \cos\varphi_0 \cos\varphi \cos\lambda - \sin\varphi_0 \sin\varphi + \cos\theta)}$$

or

$$y = \frac{R \sin^2\theta (\cos\varphi_0 \sin\varphi - \sin\varphi_0 \cos\varphi \cos\lambda)}{1 - \cos\theta (\cos\varphi_0 \cos\varphi \cos\lambda + \sin\varphi_0 \sin\varphi)}. \tag{8.5}$$

From the figure we have the proportions $\frac{C'_T C_T}{P'_T P_T} = \frac{C_T E_T}{P_T E_T}$ and $\frac{DC_F}{MP_F} = \frac{C_F E_F}{P_F E_F}$. But $\frac{C_T E_T}{P_T E_T} = \frac{C_F E_F}{P_F E_F}$, all the segments in this proportion being corresponding projections of the same line in space. $C'_T C_T$ being, by construction, the map abscissa x of point P we have $x = C'_T C_T = \frac{P'_T P_T \cdot DC_F}{MP_F}$ or, since $P'_T P_T = R \cos\varphi \sin\lambda$ and $DC_F = y$,

$$x = \frac{R \cos\varphi \sin\lambda}{R(\cos\varphi_0 \sin\varphi - \sin\varphi_0 \cos\varphi \cos\lambda)} y, \text{ and finally from (8.5)}$$

$$x = \frac{R \sin^2\theta \cos\varphi \sin\lambda}{1 - \cos\theta (\cos\varphi_0 \cos\varphi \cos\lambda + \sin\varphi_0 \sin\varphi)} \tag{8.6}$$

Equations (8.5) and (8.6) are the mapping equations for the projection, the word "projection" being applicable in this case, both in its literal sense and in the extended meaning used in the mathematical theory of cartography. They enable one to compute so-called plane coordinates (x,y) of any point P with spherical (geographic) coordinates (φ,λ) as seen from an exterior point E with spherical coordinates (φ_0, λ_0) and elevation h. The elevation is expressed in the same unit of length as the radius R of the sphere and transformed by (8.1) to the parameter θ. λ_0 is, for convenience, set equal to zero so that the λ to be used in (8.5) and (8.6) is actually the difference, $\lambda - \lambda_0$, of the Greenwich longitudes of P and E, with a suitable convention as to sign.

9. *Equations of the Grid Lines*

Since the mapping equations are linear in the two variables $\sin\varphi$, $\cos\varphi$, they can be solved explicitly by elementary methods for these two variables. Squaring and adding the resulting two equations eliminates φ and results in the equation of the meridians:

$$\begin{aligned} &x^2(\cos^2\varphi_0 \tan^2\lambda + \sin^2\theta) + y^2 \tan^2\lambda(\cos^2\varphi_0 \cos^2\theta + \sin^2\theta) - 2xy \sin\varphi_0 \sin^2\theta \tan\lambda \\ &-2xR \cos\varphi_0 \sin^2\theta \cos\theta \tan\lambda - 2yR \sin\varphi_0 \cos\varphi_0 \sin^2\theta \cos\theta \tan^2\lambda \\ &-R^2 \cos^2\varphi_0 \sin^4\theta \tan^2\lambda = 0 \end{aligned} \tag{9.1}$$

Operating similarly with respect to the linear variables $\sin\lambda$, $\cos\lambda$ in (8.5) and (8.6) eliminates λ and yields the equation of the parallels:

$$x^2(\sin\varphi_0 - \cos\theta\sin\varphi)^2 + y^2\left\{(\sin\varphi_0 - \cos\theta\sin\varphi)^2 + \cos^2\varphi_0\sin^2\theta\right\}$$
$$+ 2yR\cos\varphi_0\sin^2\theta(\sin\varphi_0\cos\theta - \sin\varphi) + R^2\sin^4\theta(\sin^2\varphi - \sin^2\varphi_0) = 0 \tag{9.2}$$

10. Inverse Mapping Equations

Arranging (9.2) in the form $A\sin^2\varphi + 2B\sin\varphi + C = 0$ and solving by the quadratic formula we obtain the expression

$$\sin\varphi = \frac{\left\{\begin{array}{c} x^2\sin\varphi_0\cos\theta + y^2\sin\varphi_0\cos\theta + yR\cos\varphi_0\sin^2\theta \pm \sin\theta(R\sin\varphi_0\sin^2\theta \\ -y\cos\varphi_0\cos\theta)(R^2\sin^2\theta - x^2 - y^2)^{\frac{1}{2}} \end{array}\right\}}{x^2\cos^2\theta + y^2\cos^2\theta + R^2\sin^4\theta}. \tag{10.1}$$

An analogous procedure with respect to $\tan\lambda$ in equation (9.1) yields

$$\tan\lambda = x\sin\theta\left\{\frac{\sin\theta(y\sin\varphi_0 - R\cos\varphi_0\cos\theta) \pm \cos\varphi_0(R^2\sin^2\theta - x^2 - y^2)^{\frac{1}{2}}}{(R\cos\varphi_0\sin^2\theta + y\sin\varphi_0\cos\theta)^2 - (x^2\cos^2\varphi_0 + y^2)}\right\} \tag{10.2}$$

or, alternatively,

$$\tan\lambda = \frac{x\sin\theta}{\sin\theta(R\cos\varphi_0\cos\theta - y\sin\varphi_0) \pm \cos\varphi_0(R^2\sin^2\theta - x^2 - y^2)^{\frac{1}{2}}} \tag{10.2'}$$

Equations (10.1) and (10.2) are the inverse mapping equations by means of which a point on the map with given coordinates (x,y) can be transformed back on the sphere. As was to be expected from previous geometrical considerations, the ambiguity introduced by the radical indicates that to each point in the map correspond two points on the sphere, the two points (one visible and the other invisible) in which the ray from E pierces the sphere.

11. The Envelope and Singularities

The discriminant $B^2 - AC$ of the above-mentioned quadratic equation set equal to 0 gives in each case the condition

$$x^2 + y^2 = R^2\sin^2\theta \tag{11.1}$$

--the equation of the outline circle or trace of the plane AB—which is therefore the envelope of both families of curves (10.1) and (10.2) or, equivalently, of (9.1) and (9.2).

In addition, the family of parallels (10.1) has the singularity found by setting the factor $(R\sin\varphi_0\sin^2\theta - y\cos\varphi_0\cos\theta)$ of the discriminant equal to zero. The resulting condition

$$y = \frac{R\sin\varphi_0\sin^2\theta}{\cos\varphi_0\cos\theta} \tag{11.2}$$

is the equation of the parallel for which $\sin\varphi = \sin\varphi_0/\cos\theta$ and which maps into the degenerated straight line ellipse mentioned in section 6. The geometrical significance of this singularity is apparent from a consideration of figure 6.

The family of meridians (10.2) also has a further singularity which was anticipated in the synthetic treatment. It results from setting the factor x in the discriminant of (10.2) = 0. The corresponding y values from (9.1) are

$$y_1 = \frac{R\sin^2\theta\cos\varphi_0}{1 - \sin\varphi_0\cos\theta},\quad y_2 = \frac{-R\cos\varphi_0\sin^2\theta}{1 + \sin\varphi_0\cos\theta} \tag{11.3}$$

which are independent of λ, so that the two points $(0,y_1)$ and $(0,y_2)$ are common to all meridians. The points are, in fact, the images of the north and south poles as can be verified by setting $\varphi = \pm 90^\circ$ in the mapping equations (8.5), (8.6).

12. Analysis of the Equation of the Parallel of Latitude

By completing the square in the quadratic latitude equation (9.2) it can be transformed into the standard form of an ellipse

$$\frac{(x-h)^2}{a^2} + \frac{(y-k)^2}{b^2} = 1$$

in which (h,k) are the coordinates of the center, and a, b are the lengths of the major and minor semi-axes. The resulting latitude ellipse in standard form is

$$\frac{x^2}{\dfrac{R^2 \sin^4\theta \cos^2\varphi}{(1-\cos\theta\cos\overline{\varphi-\varphi_0})(1+\cos\theta\cos\overline{\varphi+\varphi_0})}} + \frac{\left\{y - \dfrac{R\sin^2\theta\cos\varphi_0(\sin\varphi - \sin\varphi_0\cos\theta)}{(1-\cos\theta\cos\overline{\varphi-\varphi_0})(1+\cos\theta\cos\overline{\varphi+\varphi_0})}\right\}^2}{\dfrac{R^2\sin^4\theta\cos^2\varphi(\cos\theta\sin\varphi - \sin\varphi_0)^2}{(1-\cos\theta\cos\overline{\varphi-\varphi_0})^2(1+\cos\theta\cos\overline{\varphi+\varphi_0})^2}} = 1 \quad (12.1)$$

from which it follows that the centers lie on the y axis, the ordinates being

$$y = \frac{R\cos\varphi_0\sin^2\theta(\sin\varphi - \sin\varphi_0\cos\theta)}{(1-\cos\theta\cos\overline{\varphi-\varphi_0})(1+\cos\theta\cos\overline{\varphi+\varphi_0})} \quad (12.2)$$

The minor axis coincides with the y axis and the vertices V_1, V_2 at the extremities of the minor axis have coordinates

$$\begin{aligned} V_1&: \left(0, \frac{R\sin^2\theta\sin\overline{\varphi-\varphi_0}}{1-\cos\theta\cos\overline{\varphi-\varphi_0}}\right) \\ V_2&: \left(0, \frac{R\sin^2\theta\sin\overline{\varphi+\varphi_0}}{1+\cos\theta\cos\overline{\varphi+\varphi_0}}\right) \end{aligned} \quad (12.3)$$

The vertices on the major axis are V_3, V_4:

$$\left(\frac{R\sin^2\theta\cos\varphi}{\pm[(1-\cos\theta\cos\overline{\varphi-\varphi_0})(1+\cos\theta\cos\overline{\varphi+\varphi_0})]^{\frac{1}{2}}}, \frac{R\sin^2\theta\cos\varphi_0(\sin\varphi-\sin\varphi_0\cos\theta)}{(1-\cos\theta\cos\overline{\varphi-\varphi_0})(1+\cos\theta\cos\overline{\varphi+\varphi_0})}\right) \quad (12.4)$$

Solving (9.2) simultaneously with (11.1) yields the points of tangency of the latitude ellipse with the envelope:

$$\left.\begin{aligned} x &= \pm R\sec\varphi_0\,[(\sin\overline{\theta-\varphi_0} + \sin\varphi)(\sin\overline{\theta+\varphi_0} - \sin\varphi)]^{\frac{1}{2}} \\ y &= R\sec\varphi_0(\sin\varphi - \sin\varphi_0\cos\theta) \end{aligned}\right\} \quad (12.5)$$

13. Analysis of the Equation of the Meridians

Analysis of equation (9.1) is complicated by the presence of an xy term with the consequent skew of the meridian ellipse with respect to the coordinate axes. In view of the fact,

however, that we are dealing with a two-parameter family of projections the computational complications would not appear at all excessive.

Rotating the coordinate axes through angle α, where

$$\tan \alpha = \sin \varphi_0 \tan \lambda \tag{13.1}$$

eliminates the xy term and gives the equation of the curve with respect to the rotated axes in the form

$$\begin{aligned} &x'^2 (\sin^2 \theta + \cos^2 \varphi_0 \cos^2 \theta \sin^2 \lambda) + y'^2 \cos^2 \varphi_0 \sin^2 \lambda \\ &\quad -2x' R\cos\varphi_0 \sin^2\theta \cos\theta \sin\lambda \, (1-\cos^2\varphi_0 \sin^2\lambda)^{\frac{1}{2}} = R^2 \cos^2 \varphi_0 \sin^4 \theta \sin^2 \lambda \end{aligned} \tag{13.2}$$

an ellipse whose center lies on the y' axis and one of whose principal axes therefore passes through the origin. It may be noted that equation (13.1) is independent of θ, which means that the skew of the meridian ellipses is independent of the height of the observer above the ground, a fact which is not obvious from the synthetic treatment of part I.

Completing the square in (13.2) and following the procedure outlined in section 12 we can find the lengths of the principal axes and the coodinates of the center. These coordinates are then projected through angle α onto the original x,y axes to give the coordinates of the center with respect to this coordinate system.

Summarizing the results thus obtained we have for the length a_λ of the major semiaxis and for the length b_λ of the minor semiaxis (which passes through the center with inclination α) the following:

$$\left.\begin{aligned} a_\lambda &= \frac{R \sin^2 \theta}{(\sin^2 \theta + \cos^2 \varphi_0 \cos^2 \theta \sin^2 \lambda)^{\frac{1}{2}}} = \frac{R \sin^2 \theta}{T} \\ b_\lambda &= \frac{R \sin^2 \theta \cos \varphi_0 \sin \lambda}{\sin^2 \theta + \cos^2 \varphi_0 \cos^2 \theta \sin^2 \lambda} = \frac{a_\lambda \cos \varphi_0 \sin \lambda}{T} \\ &\qquad \text{with } T \equiv (\sin^2 \theta + \cos^2 \varphi_0 \cos^2 \theta \sin^2 \lambda)^{\frac{1}{2}} \end{aligned}\right\} \tag{13.3}$$

The center (x_c, y_c) of the meridian ellipse is

$$\left.\begin{aligned} x_c &= \frac{R \cos \varphi_0 \sin^2 \theta \cos \theta \sin \lambda \cos \lambda}{\sin^2 \theta + \cos^2 \varphi_0 \cos^2 \theta \sin^2 \lambda} = b_\lambda \cos \theta \cos \lambda \\ y_c &= \frac{R \sin \varphi_0 \cos \varphi_0 \sin^2 \theta \cos \theta \sin^2 \lambda}{\sin^2 \theta + \cos^2 \varphi_0 \cos^2 \theta \sin^2 \lambda} = b_\lambda \sin \varphi_0 \cos \theta \sin \lambda = x_c \tan \alpha \end{aligned}\right\} \tag{13.4}$$

Computing the numerical values of (13.1), (13.3), and (13.4), in that order, gives sufficient data to plot the meridian ellipse. Alternatively, the four vertices can be computed and constructed. Their x,y coordinates can be obtained from the coordinates of the center (13.4) by adding and subtracting the appropriate x or y component of a_λ and b_λ. The result for the vertices on the minor axis is

$$V_1, V_2: \begin{cases} x_v = b_\lambda (\cos \theta \cos \lambda \pm \cos \alpha) \\ y_v = b_\lambda \tan \alpha \ (\cos \theta \cos \lambda \pm \cos \alpha) = x_v \tan \alpha \end{cases} \tag{13.5}$$

where the two upper signs of the ambiguities are used for one vertex and the two lower for the other.

Similarly, the two vertices on the major axis are

$$V_3, V_4: \begin{cases} x_v = b_\lambda \cos \theta \cos \lambda \pm a_\lambda \sin \alpha \\ y_v = b_\lambda \cos \theta \cos \lambda \tan \alpha \mp a_\lambda \cos \alpha \end{cases} \tag{13.6}$$

Simultaneous solution of (13.2) and its envelope $x'^2 + y'^2 = R^2 \sin^2 \theta$ gives the points of tangency in terms of rotated coordinates x', y'. A rotation through $-\alpha$ then yields these points in terms of the x,y coordinate system of figure 2 as

$$\begin{cases} x = \dfrac{R \sin \lambda}{1 - \cos^2 \varphi_0 \sin^2 \lambda} \left(\cos \varphi_0 \cos \theta \cos \lambda \pm \sin \varphi_0 (\sin^2 \theta - \cos^2 \varphi_0 \sin^2 \lambda)^{\frac{1}{2}} \right) \\ y = \dfrac{R}{1 - \cos^2 \varphi_0 \sin^2 \lambda} \left(\sin \varphi_0 \cos \varphi_0 \cos \theta \sin^2 \lambda \mp \cos \lambda (\sin^2 \theta - \cos^2 \varphi_0 \sin^2 \lambda)^{\frac{1}{2}} \right) \end{cases} \tag{13.7}$$

An interesting geometrical property of the centers (13.4) of the meridian ellipses is that they all lie on an ellipse; this curve can therefore be used in locating the centers by intersecting it with the perpendicular bisector of the chord connecting the points of tangency (13.7). This locus of centers is found by eliminating λ from equations (13.4). Since $y_c/x_c = \sin \varphi_0 \tan \lambda$ it follows that $\sin^2 \lambda = y_c^2/(x_c^2 \sin^2 \varphi_0 + y_c^2)$, and this quantity substituted in the second of equations (13.4) effects the desired elimination of λ. Dropping the subscript c of x and y, since these are now running coordinates, and arranging the equation in standard form results in

$$\frac{x^2}{\dfrac{R^2 \cos^2 \varphi_0 \sin^2 \theta \cos^2 \theta}{4(1 - \sin^2 \varphi_0 \cos^2 \theta)}} + \frac{\left[y - \dfrac{R \sin \varphi_0 \cos \varphi_0 \sin^2 \theta \cos \theta}{2 (1 - \sin^2 \varphi_0 \cos^2 \theta)} \right]^2}{\dfrac{R^2 \sin^2 \varphi_0 \cos^2 \varphi_0 \sin^4 \theta \cos^2 \theta}{4 (1 - \sin^2 \varphi_0 \cos^2 \theta)^2}} = 1 \tag{13.8}$$

an ellipse whose minor axis lies on the y axis, one of the vertices being at the origin of the coordinate system.

14. Formulas for the Orthographic Projection

The orthographic, or parallel, projection is a limiting case of this class of projections obtained by letting h in equation (8.1) approach infinity. Setting, in consequence, $\theta = 90°$, $\sin \theta = 1$, $\cos \theta = 0$ simplifies the various equations considerably. We list, for reference, some of the results.

The mapping equations (8.5), (8.6)

$$x = R \cos \varphi \sin \lambda$$
$$y = R (\cos \varphi_0 \sin \varphi - \sin \varphi_0 \cos \varphi \cos \lambda)$$

The inverse mapping equations (10.1), (10.2)

$$\sin \varphi = \frac{1}{R} \left(y \cos \varphi_0 \pm \sin \varphi_0 (R^2 - x^2 - y^2)^{\frac{1}{2}} \right)$$

$$\tan \lambda = \frac{x}{- y \sin \varphi_0 \pm \cos \varphi_0 (R^2 - x^2 - y^2)^{\frac{1}{2}}}$$

The vertices of the latitude ellipse

V_1: $(0, R \sin \overline{\varphi - \varphi_0})$; V_2: $(0, R \sin \overline{\varphi + \varphi_0})$; V_3, V_4: $(\pm R \cos \varphi, R \cos \varphi_0 \sin \varphi)$

The meridian ellipses all have their centers at the origin. The inclination of the major axis is still $90° + \alpha = 90° + \arctan (\sin \varphi_0 \tan \lambda)$, but its length is constant and equal to the diameter of the circular envelope $x^2 + y^2 = R^2$, so that each meridian ellipse is tangent to

this circle at the extremities of the major axis. The two vertices at the extremities of the minor axis have coordinates $x = \pm R \sin \alpha$, $y = \pm R \cos \alpha$.

Making the further simplification of setting $\varphi_0 = 0$, $\vartheta_0 = 90°$, we obtain the familiar equatorial and polar orthographic projection respectively of the sphere which we assumed as known a priori, and used as our front and top views.

Mapping equations front view $\begin{cases} x = R \cos \varphi \sin \lambda \\ y = R \sin \varphi \end{cases}$

Mapping equations top view $\begin{cases} x = R \cos \vartheta \sin \lambda \\ y = - R \cos \vartheta \cos \lambda \end{cases}$

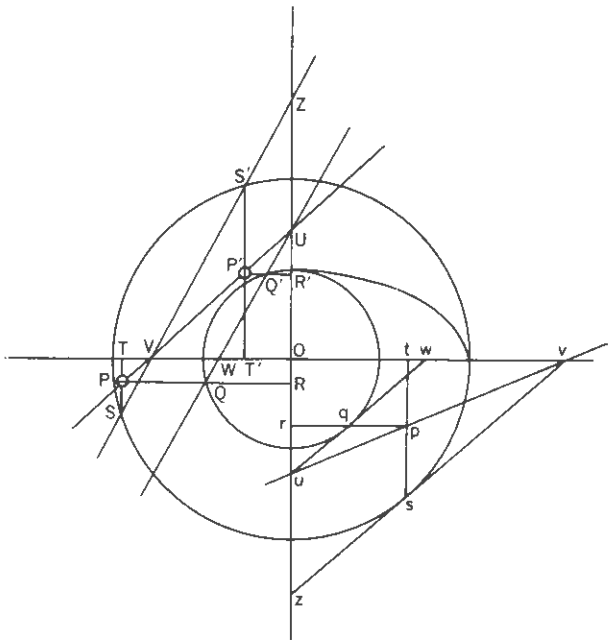

FIGURE 7

III. AUXILIARY THEOREMS AND CONSTRUCTIONS

15. Construction of the Ellipse With Proportional Dividers

When a circle of radius a is rotated about a diameter through an angle i and projected orthogonally onto the plane of the circle in its original position, the resulting trace is an ellipse whose major axis coincides with the axis of revolution of the circle and whose minor semiaxis is $b = a \cos i$. Obviously every chord of the circle perpendicular to the axis of revolution, the major axis of the ellipse, is reduced in the ratio 1: cos i or $a:b$. Reversing the motion it is seen that, conversely, if the chord of an ellipse parallel to the minor axis is extended in the ratio $a:b$ its end points will lie on a circle with radius a and concentric with the ellipse, the so-called major auxiliary circle.

Similarly, if the ellipse with major semiaxis a and minor semiaxis b is rotated about its minor axis through the angle i, the corresponding trace on the initial plane will be a circle, concentric with the ellipse and with radius b, the minor auxiliary circle of the ellipse. Any desired number of points P on the ellipse (see fig. 7) can therefore be constructed by drawing an arbitrary half-chord RQ of the minor auxiliary circle parallel to the major axis, and extending it in the ratio $a:b$ to P, or, by constructing a half-chord TS of the major auxiliary circle parallel to the minor axis and reducing it in the ratio $b:a$ to P.

This optional expansion or reduction is easily and accurately accomplished with one fixed setting of proportional dividers for a given ellipse and this method of constructing the

points of an ellipse with prescribed axes seems superior to other methods when an adequate instrument is available.

16. Chords and Tangents of the Ellipse

The ratio $a:b$ is also the key to the construction of the points of intersection of an ellipse with an arbitrary chord and to most other constructions involving ellipses. In figure 7 let UV be the given chord, where, as before, the ellipse is defined by the auxiliary circles with center O, radii a and b, and the indicated directions of the axes. Set one end of the proportional dividers to a with the other end b, clamp, and divide OV at W in the ratio $a:b$. The line UW is the locus of points which divide perpendiculars from points on UV to the line OU in the ratio $a:b$. (A diligent student of high school geometry will also be able to construct this line UW with merely a ruler.) Through the intersections Q and Q' of UW with the minor auxiliary circle draw parallels QR and $Q'R'$ to the major axis cutting UV in P and P', the points sought. An alternative and analogous construction, involving the extension of the minor axis segment OU in the ratio $a:b$ to Z and using the intersections S and S' of ZV with the major auxiliary circle, is also shown in the figure. Depending on the slope of the given chord UV one or the other of these two alternatives will, in general, be more accurate.

A tangent to the ellipse is the special case of a chord for which the points of intersection P and P' merge into a single point p as indicated in the lower right-hand quadrant of figure 7. The auxiliary lines UW and VZ become in this case tangents to the auxiliary circles and can therefore be constructed without recourse to proportionality. A number of problems involving tangents to an ellipse can be solved by using the interrelations of the lines in this figure.

17. Ruler-and-Compass Constructions

In the absence of proportional dividers a number of other methods of constructing the ellipse exactly, though not in general precisely, due to propagation of errors resulting from interdependent constructions and the like, are available, not to mention the variety of constructions for quasi-ellipses by means of circular arcs. The best known, probably, is the one using the angle variously called eccentric, parametric, or auxiliary angle and designated by astronomers as the eccentric anomaly. In figure 7 the points O, Q, and S are collinear and this line OQS forms with the major axis the angle in question, or its supplement. Hence to construct a point P of the ellipse, corresponding to an arbitrary radius vector (line

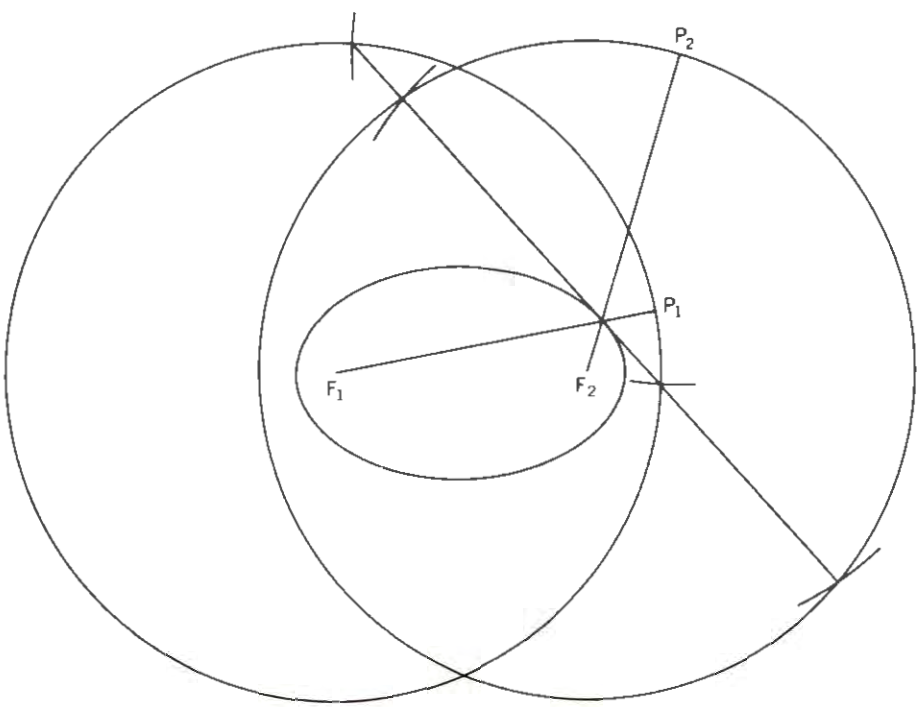

Figure 8

through O), determine its intersections Q and S with the two auxiliary circles and produce parallels to the major and minor axes respectively, as indicated, to determine P.

A template, based on this principle of construction, can be readily constructed to draw points on an ellipse of any shape or size, not exceeding that of the template. On a piece of square-section coordinate paper draw a series of lines radiating from a central point O. Place the drawing, with the two auxiliary circles and the principal axes sketched in, on a light-table and over the template with the center of the ellipse on O and the axes coinciding with the two perpendicular grid lines through O. From the intersections of each radiating line with the auxiliary circles follow, by eye, the corresponding square-grid lines to determine a point on the ellipse.

Another method depends on a well-known property of the foci. With center on a minor-axis vertex and radius a, the length of the major semiaxis, draw an arc intersecting the major axis in F_1 and F_2, the foci. Choose an arbitrary point on the major axis, dividing the latter into two segments. Two circles, centered at F_1 and F_2 with radii equal, respectively, to the lengths of the two segments, will intersect in four points of the ellipse.

18. A New Method of Constructing Ellipses

Figure 8 illustrates a simple and precise construction which may be new. Determine the foci F_1 and F_2 as above and draw circles about them with radius $2a$, the length of the major axis. From any point P_1 of one of these circles as center and with the constant radius $2a$ strike off an arc on the other circle and draw the chord connecting the two points so found. The chord will be a tangent of the ellipse, and the intersection of the chord with F_1P_1 the point of contact. The focal chord from F_2 through this found point must give the same result. It intersects its circle at P_2, and the circle with radius $2a$ and center P_2 cuts the first circle in two points collinear with the tangent determined from P_1.

This method has a number of advantages over the others in simplicity as well as precision and generality:

(a) no small circles are used; in fact only one fixed setting of the compass is needed; (b) the tangents to all the points are an automatic byproduct if needed; (c) there is a simple check for each point, as described above; (d) with the foci separated by a distance greater than $2a$ the construction will result in a hyperbola, the method being perfectly general for all types and shapes of conic sections except the parabolas which are, in any case, all the same shape. (Placing the foci a distance $= 2a$ apart produces the straight line ellipse of length $2a$.)

19. Pascal's Theorem

The theorem concerning the Pascal line, used in section 7 in the construction of the meridian ellipse, can be stated as follows[2]: "If 1,2,3,4,5,6 are points of a conic (fig. 9), the points of intersection of the pairs of lines 12 and 45, 23 and 56, 34 and 61 are on a straight line (Pascal line); and conversely." The order in which these 6 points are designated is optional, each essentially different arrangement giving rise to a different Pascal line. The points given in figure 9 represent a special case in which the points 2,3 and 4,5 are coincident, so that the chord 2 3 as well as chord 4 5 are actually given tangents with their points of contact.[3] Points 1 to 5 are given and point 6 is to be found by use of the theorem. We specify an arbitrary direction for the chord 16, and find 6 on this line by satisfying the requirements of the theorem. The intersection of 12 with 45 at M is one point on the Pascal line, and the intersection of 16 and 34 at L is another, thus fixing the line. The theorem states that 23 meets 56 on ML, hence at N, the intersection of 23 with ML. This fixes 56 and the intersection of 56 with 16, which is therefore the point 6. Note that the line 16 is used for intersection with other lines in the construction even though the point 6 itself is not fixed until the final step.

20. Mapping Equations for the Tilted Aspect

In all that precedes it is assumed that the eye or the camera is sighting down along the normal to the sphere, the so-called normal aspect. If the optical axis of the camera devi-

[2] Projective Geometry by John W. Young, Carus Monograph No. 4, Mathematical Association of America p. 67.
[3] Ibid, pp. 71-72.

ates from this line the resulting image on the plate will be correspondingly distorted. The consequent complications in the analysis take us beyond the scope of this paper, but we indicate here one optional course of procedure in developing for this general case mapping equations corresponding to (8.5,8.6).

In figure 10, E_F $(A_F\ D\ B_F)$ is the trace of the tangent cone from the front view of figure 2. A tilt of the camera through an angle i in the plane of the central meridian rotates line $A_F\ D\ B_F$ around E_F into position $A'_F\ D'\ B'_F$. Since we have left aside, throughout, all considerations of scale reduction depending on the optics of the camera we may assume the points (8.5,8.6) of the normal aspect of our map to lie in the plane $A_F B_F$ which is, of course, the trace of the oblique section of figure 2.

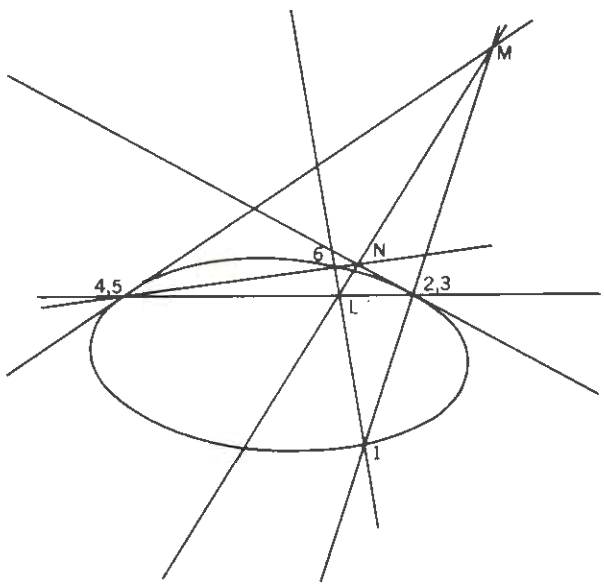

FIGURE 9

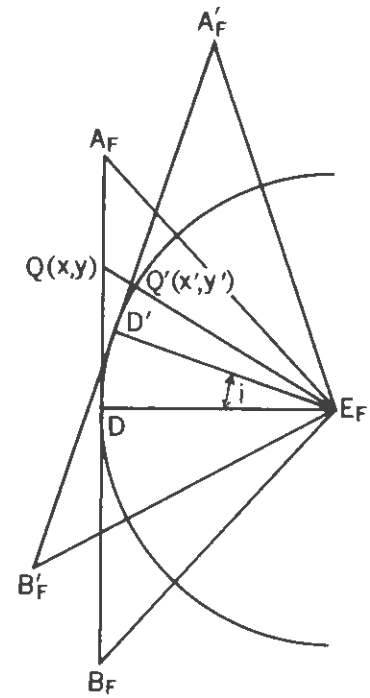

FIGURE 10

Let Q be an arbitrary point of the normal aspect with coordinates (x,y) as computed from mapping equations (8.5,8.6). The ray QE_F intersects $A'_F\ B_F$ in Q', the image of Q in the tilted aspect. The ordinate y of Q projects orthogonally, in true length, into QD of figure 10 which lies in the plane of the central meridian. Hence

$$y = c \tan DE_F Q, \tag{20.1}$$

with $c = DE_F$ or, from figure 2, $c = R \sin \theta \tan \epsilon$.

The trace of the straight line central meridian projects in the rotation into a straight line on plane $A'_F B'_F$ and through D', the center of the camera plate. This line is designated the y' axis of the coordinate system on plane $A'_F B'_F$ with D' as origin. The abscissas of points Q remain unchanged, $x' = x$, and the ordinates y' become $Q'D' = D'E_F \tan D'E_F Q' = c \tan (DE_F Q - i)$, or

$$y' = c\,\frac{\tan DE_F Q - \tan i}{1 + \tan i \tan DE_F Q}.$$

With the substitution $\rho = R \sin\theta \tan\theta$ and $\tan DE_F Q = y/\rho$ from (20.1) the complete transformation becomes

$$\begin{aligned} x' &= x \\ y' &= R \sin\theta \tan\theta \, \frac{y \cos\theta \cos i - R \sin^2\theta \sin i}{y \cos\theta \sin i + R \sin^2\theta \cos i} \end{aligned} \tag{20.2}$$

On the other hand a deflection of the optical axis of the camera from its normal position through an angle j in a plane perpendicular to the plane of the central meridian would result in a transformation analogous to (20.2), with the roles of x and y interchanged. Since every

φ	λ	0°	5°	10°	15°	20°	25°	30°	
	x		3.707	7.528	11.604	16.130	21.462	28.504	← Points of 5° grid lines on perimeter
	y		42.099	41.586	40.638	39.062	36.407	31.202	
65°	x	0.000							↓
	y	42.262							
60°	x	0.000	5.200	10.094	14.430	18.043			20.417
	y	41.177	40.960	40.332	39.358	38.130			37.003
55°	x	0.000	7.081	13.619	19.193	23.580	26.744	28.789	28.849
	y	37.108	36.860	36.155	35.087	33.783	32.366	30.939	30.884
50°	x	0.000	9.166	17.451	24.223	29.221	32.504	34.322	34.819
	y	28.861	28.669	28.130	27.333	26.393	25.409	24.455	23.952
45°	x	0.000	11.118	20.966	28.706	34.080	37.289	38.761	39.010
	y	16.025	16.034	16.061	16.100	16.144	16.189	16.231	16.258
40°	x	0.000	12.458	23.345	31.670	37.208	40.288	41.474	41.524
	y	0.000	0.350	1.313	2.680	4.217	5.741	7.143	7.862
35°	x	0.000	12.841	24.017	32.498	38.070	41.104	42.203	42.246
	y	- 16.025	- 15.315	- 13.365	- 10.610	- 7.528	- 4.491	- 1.712	- 1.173
30°	x	0.000	12.283	23.036	31.289	36.809	39.909		40.865
	y	- 28.861	- 27.915	- 25.305	- 21.592	- 17.408	- 13.248		- 10.778
25°	x	0.000	11.111	20.956	28.693	34.065			36.744
	y	- 37.108	- 36.096	- 33.285	- 29.231	- 24.583			- 20.879
20°	x	0.000	9.698	18.415	25.465				28.285
	y	- 41.178	- 40.228	- 37.563	- 33.657				- 31.401
15°	x	0.000							↑
	y	- 42.262							
	x		8.403	16.645	24.530	31.786	37.949	41.959	← Points of 5° grid lines on perimeter
	y		- 41.418	- 38.846	- 34.414	- 27.852	- 18.599	- 5.052	

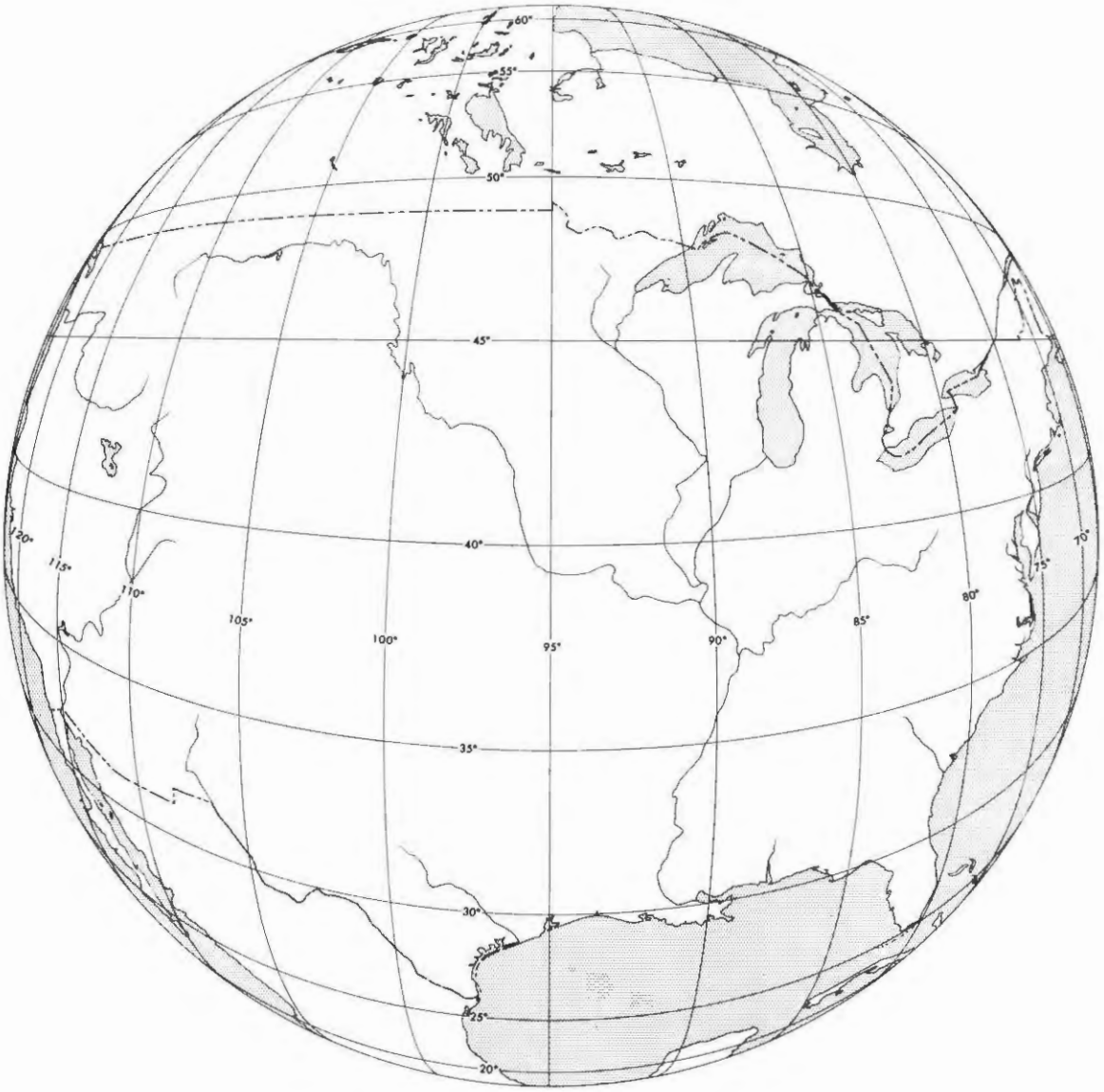

FIG. 11.—Aerial view of the United States—An observer, approximately 400 miles vertically above the central point in lat. 40°N., long. 95°W., and looking straight down, could see all of the continental U.S. excluding Alaska.

deflection can be decomposed into two independent rotations of this type, the resultant general transformation for tilt is the linear fractional transformation

$$\left.\begin{aligned} x_T &= R \sin\theta \tan\theta \; \frac{x_N \cos\theta \cos j - R \sin^2\theta \sin j}{x_N \cos\theta \sin j + R \sin^2\theta \cos j} \\ y_T &= R \sin\theta \tan\theta \; \frac{y_N \cos\theta \cos i - R \sin^2\theta \sin i}{y_N \cos\theta \sin i + R \sin^2\theta \cos i} \end{aligned}\right\} \tag{20.3}$$

where (x_T, y_T) are the coordinates in the tilted aspect corresponding to the point (x_N, y_N) of the normal aspect as derived from (8.5,8.6). By substituting the equations (8.5,8.6) in (20.3) we can obtain these mapping equations in terms of the original spherical coordinates.

21. An Aerial View of the United States

Assuming the point with latitude $\varphi_0 = 40°$N. and longitude $\lambda_0 = 95°$ W. of Greenwich to be, roughly, the center of the continental U.S., exclusive of Alaska, it will be found, by rough measurement on a globe, that a value for the parameter θ of 25° in formulas (8.5,8.6) will extend the horizon sufficiently to include all of this area. An exact value for θ can be computed from the formula

$$\cos \theta = \cos \varphi_0 \cos \varphi \cos \lambda + \sin \varphi_0 \sin \varphi \tag{21.1}$$

which expresses the functional relation between φ and λ for points on the horizon, found by setting $LP = 0$ in (8.4). It may be noted conversely that, having fixed θ, for a given value of φ (respectively λ) the corresponding value of λ (respectively φ) of the parallel (meridian) on the horizon can be found by solving this equation (21.1).

Figure 11 is a sketch of this area on the above assumptions. The 5° grid lines were drawn by connecting the points tabulated in the accompanying table in which the main body was computed from (8.5,8.6) with $\theta = 25°$, $\varphi_0 = 40°$ and $R = 100$. The points listed at the top and bottom margins are the intersections (points of tangency) of the meridians with the circular perimeter, or horizon, of the map as computed from (13.7). The points to the right of the main body of the table are the tangent intersections of the parallels of latitude with the perimeter, computed from (12.5).

Since the map is symmetrical with respect to the central meridian ($\lambda = 0$), points to the east of this meridian (λ positive) only are listed. Thus, for example, the entry in the table for $\varphi = 30°$, $\lambda = 20°$ ($x = -36.809$, $y = -17.408$) represents the coordinates of the intersection of the 30th parallel with the 75th Greenwich meridian, 20° to the east of the 95th, or central, meridian. The symmetrical point on this parallel, 20° west of the central meridian, i.e., the 115th meridian would therefore have the same y coordinate, -17.408, but its x coordinate is - 36.809.

☆ U. S. GOVERNMENT PRINTING OFFICE : 1962 O - 654381