U.S. DEPARTMENT OF COMMERCE / Environmental Science Services Administration

Technical Report

COAST AND GEODETIC SURVEY C&GS 35

Block Analytic Aerotriangulation

ROCKVILLE, MD.
November 1967

ESSA TECHNICAL REPORTS

Coast and Geodetic Survey Technical Bulletins

The C&GS series of the ESSA Technical Reports continues the Coast and Geodetic Technical Bulletins. They present technical information related to C&GS scientific and technical activities, primarily for Survey personnel. Since many of these reports deal with new practices and techniques, the views expressed are those of the authors, and do not necessarily represent final Survey policy.

The mission of the Coast and Geodetic Survey is to provide charts and related information for the safe navigation of marine and air commerce and to provide other earth science data and information for protection of life and property and to meet engineering, scientific, defense, commercial, and industrial needs. Basic and applied research is an integral part of the Survey's mission in investigating and analyzing physical factors relating to the earth's configuration, resources, natural forces, and phenomena. Modern science and technology are utilized in the full scope of survey work--geodetic surveys; hydrographic and topographic surveys; tide, current, and other oceanographic observations and investigations; geomagnetic, seismological, gravity and astronomic observations, investigations, and measurements; and field surveys for aeronautical charts.

The numbering of the ESSA Technical Reports follows sequentially from the C&GS Technical Bulletin Series. C&GS Technical Bulletins and ESSA-C&GS Technical Reports are available through the Superintendent of Documents, Government Printing Office, Washington, D.C. 20402. Those publications marked by an asterisk are out of print.

COAST AND GEODETIC SURVEY TECHNICAL BULLETINS

		Price
*No. 1.	Aerotriangulation Adjustment of Instrument Data by Computational Methods. William D. Harris, January 1958 (Superseded by No. 23.)	5¢
*No. 2.	Tellurometer Traverse Surveys. Lt. Hal P. Demuth, March 1958	15¢
*No. 3.	Recent Increases in Coastal Water Temperature and Sea Level--California to Alaska. H. B. Stewart, Jr., B. D. Zetler, and C. B. Taylor, May 1958	20¢
*No. 4.	Radio Telemetry Applied to Survey Problems. Richard R. Ross, February 1959	15¢
*No. 5.	Raydist on Georges Bank. Capt. Gilbert R. Fish, April 1959.	25¢
No. 6.	The Tsunami of March 9, 1957, as Recorded at Tide Stations. Garrett G. Salsman, July 1959	15¢
*No. 7.	Pantograph Adjustment. G. C. Tewinkel, July 1959	5¢
*No. 8.	Mathematical Basis of Analytic Aerotriangulation. G. C. Tewinkel, August 1959 (Superseded by No. 21.)	15¢
*No. 9.	Gravity Measurement Operations in the Field. Lt. Comdr. Hal P. Demuth, September 1959	15¢

Continued on inside back cover

U.S. DEPARTMENT OF COMMERCE
Alexander B. Trowbridge, Secretary

ENVIRONMENTAL SCIENCE SERVICES ADMINISTRATION
Robert M. White, Administrator

COAST AND GEODETIC SURVEY
James C. Tison, Jr., Director

ESSA TECHNICAL REPORT C&GS 35

Block Analytic Aerotriangulation

M. KELLER and G.C. TEWINKEL

COAST AND GEODETIC SURVEY TECHNICAL BULLETIN NO. 35
ROCKVILLE, MD.
November 1967

For sale by the Superintendent of Documents, U.S. Government Printing Office
Washington, D.C., 20402 - Price 55 cents

Abstract

A computer program has been developed in the Coast and Geodetic Survey for the rigorous triangulation adjustment of blocks of 200 aerial photographs. Preliminary programs serve several purposes: apply corrections to image coordinates for lens distortion, film distortion and atmospheric refraction; detect and eliminate blunders in card order, coordinate observation, and control data; provide provisional three-dimensional coordinates to all objects; and account for earth curvature. Then the block adjustment program is designed to: accommodate any number of photographs within the memory capacity of the computer, utilizing tapes, core, and disk; automate the assignment and arrangement of the unknowns; apply the fundamental colineation principle of projective geometry; assign different classes and values of weights to image data and to control data; solve the system of equations, using least squares, by a modified Gaussian elimination routine which includes a special arrangement for avoiding zero multiplications and for making maximum use of the computer memory.

Contents

Abstract	ii
Introduction	1
The Coast and Geodetic Survey System	2
Three-Photo Analysis	4
Strip Adjustment	4
Earth Curvature Transformation	5
Block Adjustment	5
Mathematical Basis	6
Photogrammetric Formulation	6
Resection	11
Solution of the Equations	12
Unknowns and Control	13
Weighted Observations	13
Intersection	15
Features of the Program	18
Safeguards on Computer Time	22
Descriptions of Dimensioned Arrays	24
References	101
Appendices	
1. Computer Flow Diagram	33
2. The Fortran Source Program	47
3. Annotations to the Program	66
4. Sample Input Data	94
5. Sample Output Data	96

Block Analytic Aerotriangulation

Introduction

Block aerotriangulation consists of the adjustment of all the overlapping aerial photographs in an extensive area so as to fit ground control data and yield accurate coordinates for all the objects that are included in the analysis. In the analytic approach, image coordinates are measured with a comparator in contrast with the analog approach where measurements are made with a stereoscopic plotting instrument.

Block analytic aerotriangulation comprises the climax of a series of four computer programs developed by the Coast and Geodetic Survey. Maximum accuracy is the essence of the development and all other considerations have been intentionally subordinated. Attempts have been made to devise the system so that accuracy is limited only by the precision of the input data. Nevertheless, considerable programming is included in an effort to automate the operation insofar as arranging the system of equations without human intervention.

Five previous technical bulletins include background information. Technical Bulletin No. 21[1], "Analytic Aerotriangulation," states the basic general philosophy and mathematical formulation for the system as a whole. Technical Bulletin No. 23[2], "Aerotriangulation Strip Adjustment," documents the application of a polynomial equation for transforming the data from a strip of aerial photographs to fit ground control data. This technique is applied as a preliminary measure in preparation for block adjustment. Technical Bulletin No. 25[3], "Aerotriangulation: Image Coordinate Refinement," explains the mathematical details and the computer program used to correct the observed image coordinates for the known systematic effects of lens distortion, film distortion, etc. This routine also constitutes a preliminary operation for block adjustment. Technical Bulletin No. 29[4], "Three-Photo Aerotriangulation," describes a preliminary photograph orientation analysis and computer program. Technical Bulletin No. 32[5], "Space Resection in Photogrammetry," presents the analytic routine that constitutes the mathematical unit for block adjustment. Incidently, the preliminary programs are applied in the numerical sequence 25, 29, 23, 32, which differs from the numbers of the technical bulletins.

The block adjustment program uses as input the output of preliminary computations which are discussed presently. The computation solves for corrections to provisional and approximate data so as to minimize the discrepancies of observed image coordinates based on the colineation condition (Schmid[6]) wherein each set of three points, consisting of image, lens, and corresponding object, must lie on a common straight line.

The output consists principally of the three corrected coordinates for each object, together with the residual error of the corresponding images, and, if desired, the final values of the six camera parameters for each photograph. The latter data may be useful for subsequently orienting a stereoscopic plotting instrument or a rectifying camera.

Attention is called to the solution of the very large set of equations which predominates the block adjustment problem. The Fortran program provides for a maximum of 200 photographs which may generate as many as 5700 unknowns including the 1200 unknown camera parameters and 4500 unknown corrections to the provisional object coordinates. The 1200 camera unknowns form a comparatively dense portion of the solution whereas the other 4500 unknowns contribute somewhat less difficulty to the solution. Although a modified Gaussian elimination method is used for the solution, roundoff difficulties are not expected to be too troublesome, as is explained later on.

Special efforts are made in the program to avoid the storage of, and multiplication by, blocks of zero coefficients which normally occur in this type of solution. The purpose of this consideration is primarily to maximize the efficient utilization of the memory capacity of the computer, as well as to expedite the computation. The general subject of solutions of these equations was discussed by Keller[7] and Davis[8] in March 1965. The subject also received much attention at the International Symposium on Spacial Aerotriangulation at Urbana, Illinois in February, 1966, and probably constitutes one of the most important items remaining in block aerotriangulation at this date.

One of the important features of the overall system lies in the detection and elimination of human blunders during two of the preliminary computer programs, namely, three-photo orientation and strip adjustment. Thus the preliminary programs furnish fairly accurate coordinates of all ground objects as first approximations for the block adjustment. The fact that these coordinates are both accurate and free from blunders tends to reduce the number of iterations of the block adjustment.

The Coast & Geodetic Survey System

The aerotriangulation system employed by the Coast and Geodetic Survey consists of four parts which are discussed presently: (1) three-photo orientation, (2) strip adjustment, (3) a coordinate transformation that takes earth curvature into account, and (4) block adjustment, the last one

being the subject of this paper. The purpose of the preliminary programs is to furnish improved and complete data for the block adjustment in an effort to reduce the number of iterations of the block problem to a minimum. (See Figure 1.)

Three-Photo Analysis

The first program, "Three-Photo Aerotriangulation"[4] also includes all of the ideas of "Aerotriangulation: Image Coordinate Refinement"[3]. The sequence of the input cards is tested. Multiple readings of the image coordinates are averaged and tested for gross deviations from the mean. The image coordinates are corrected for both symmetric and asymmetrical radial distortion of the camera lens and for dimensional instability of the photographic film. A correction is also incorporated for atmospheric refraction, but earth curvature is accounted for in a different manner which is discussed later. The procedure includes the application of the results of the calibration measurements of the comparator.

Not only are the corrected image values used in the three-photo solution that follows, but also the values are punched to serve later as input data for the block adjustment. The three-photo solution derives an orientation of each photograph relative to the previous two in a strip and produces coordinates of objects in an arbitrary model coordinate system which is continuous throughout the strip. Residual discrepancies are analyzed and blunders are rejected by the computer based on a criterion value which the photogrammetrist selects. The colineation principle is imposed so that discrepancies of the observed image coordinates are minimized through the application of least squares.

Strip Adjustment

A second program, "Aerotriangulation Strip Adjustment,"[6] is used to transform the three-photo model coordinates of objects into the prevailing ground control coordinate system, fitting control data through the application of polynomial formulas (which are empirical in a sense) and least squares. The results constitute provisional positions and elevations of all the objects, including the elevations

FLOW DIAGRAM -BLOCK ADJUSTMENT

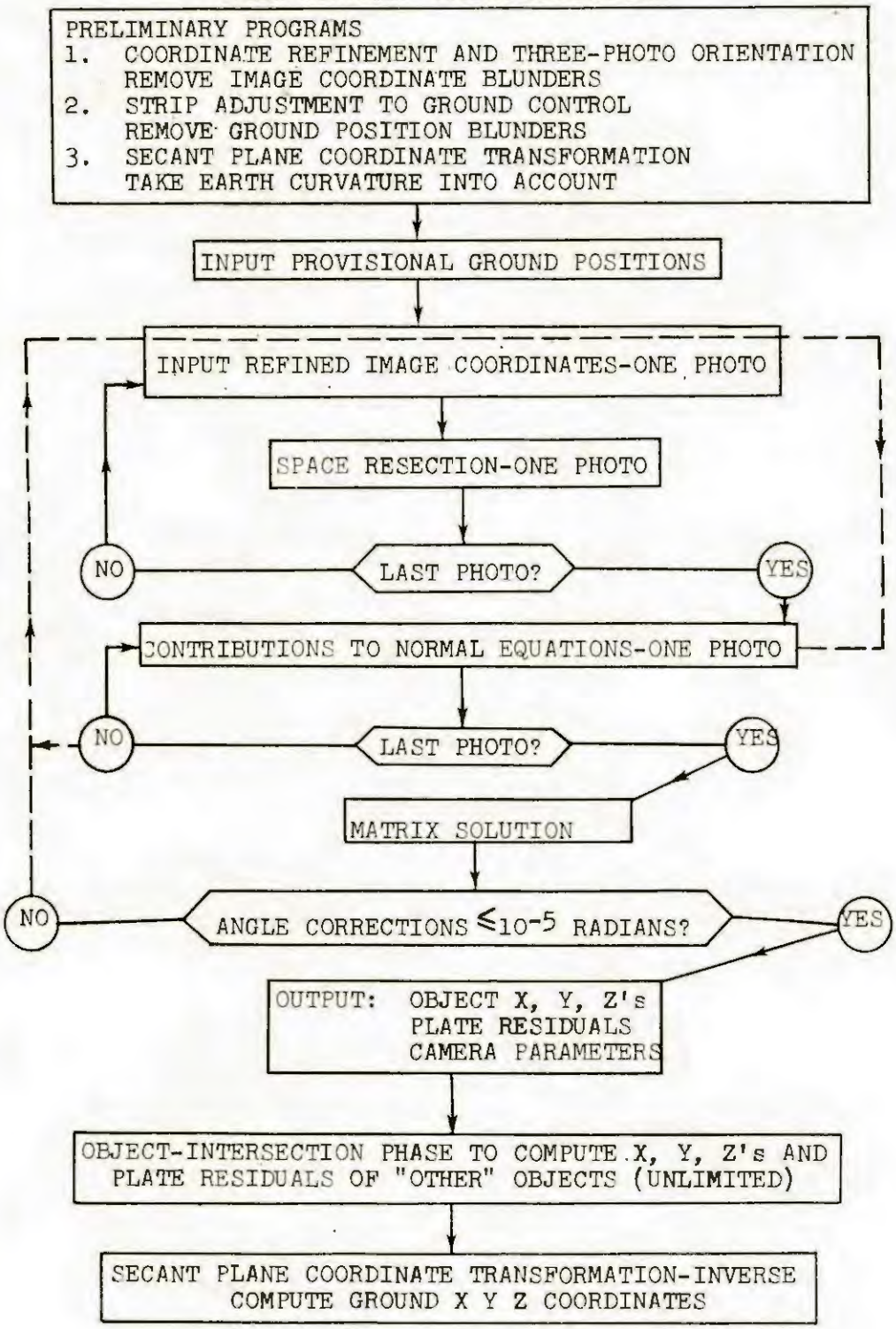

Figure 1

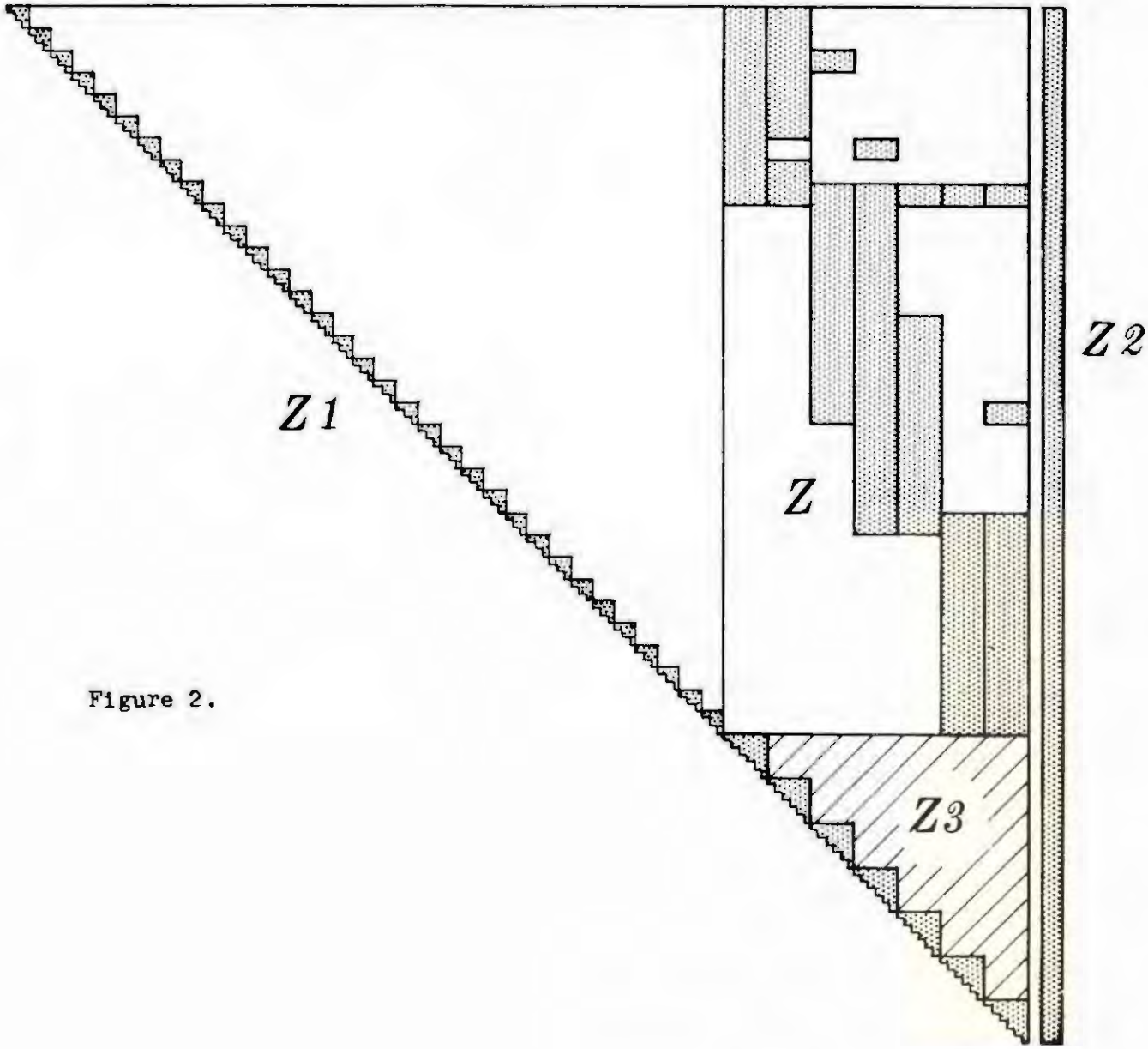

Figure 2.

of horizontal control stations and the horizontal coordinates of vertical control stations. If the resultant adjustment contains large residual discrepancies, the difficulties are detected by human inspection and corrected. The accuracy is usually adequate for ordinary, subsequent map compilation operations. This program can also be used to adjust a strip which contains no control points to fit common points of an adjacent strip.

Earth Curvature Transformation

The scheme (the secant-plane system) outlined in Technical Bulletin No. 21 has been applied in most of the work to date. The geometry is completely rigorous. The application requires two special computer operations which are entirely adequate.

Before the block adjustment is begun, the provisional coordinates (usually in one of the state plane systems[9]) of the objects are transformed into this special geocentric system which has been called the secant plane system. At the present time a separate computer program is used for this operation but is now being incorporated into the block adjustment program as a subroutine. The formulas were stated on page 15 of Technical Bulletin No. 21[1] and the computer program has been published in a monogram by Umbach[9]. The block adjustment is completed with the object coordinates in the secant plane system after which they are transformed back into, say, the state plane coordinate system through the application of the same program operated in its inverse mode. The solution first transforms the state plane coordinates $\underline{X}$, $\underline{Y}$, $\underline{h}$ (furnished by the Strip Adjustment program) into latitude, longitude and elevation (φ, λ, h), and then into $\underline{X}$, $\underline{Y}$, $\underline{Z}$ relative to a plane which is secant to the earth at the center of the area being triangulated in such a manner that the $\underline{Z}$ coordinates are all positive. The inverse procedure is also in two stages: $\underline{X}$, $\underline{Y}$, $\underline{Z}$ to $\underline{\varphi}$, $\underline{\lambda}$, $\underline{h}$ and $\underline{\varphi}$, $\underline{\lambda}$, $\underline{h}$ into the $\underline{X}$, $\underline{Y}$, $\underline{h}$ state plane system.

Block Adjustment

If maximum accuracy is required for a photogrammetric survey, or if more than one strip of photographs is involved, the block adjustment routine is applied, based on the refined image coordinates and the

provisional object coordinates. The adjustment of the block is not influenced by the polynomial formulas used in strip adjustment.

Block adjustment itself may be defined as "simultaneous resection". Resection, in turn, is defined (see "Space Resection in Photogrammetry"[5]) as the determination of the three linear elements of position and the three angular elements of orientation of the aerial camera when it took a given photograph. The same colineation principle is applied as in the three-photograph solution used earlier, but in block adjustment all the photographs of all the strips of a mapping project are dealt with simultaneously in a manner that also imposes all the ground control data.

The unknown parameters of the block adjustment consist of corrections to the six elements of resection for each photograph together with corrections to the three provisional coordinates of each object. The simultaneous observation equations include all these unknowns in a single very large matrix solution. The major chore of the block adjustment computation relates to the solution of this matrix in a manner which efficiently utilizes the memory capacity of the computer.

Mathematical Basis

Photogrammetric Formulation

The equations of colinearity (projective transformation) are stated as follows without derivation as they were established in the reference[1]:

$$\frac{x}{z} = \frac{(X-X_0)a_{11} + (Y-Y_0)a_{12} + (Z-Z_0)a_{13}}{(X-X_0)a_{31} + (Y-Y_0)a_{32} + (Z-Z_0)a_{33}}$$

$$\frac{y}{z} \quad \frac{(X-X_0)a_{21} + (Y-Y_0)a_{22} + (Z-Z_0)a_{23}}{(X-X_0)a_{31} + (Y-Y_0)a_{32} + (Z-Z_0)a_{33}} \quad . \qquad (1)$$

Here x and y are image coordinates based on the principal point as origin, z is the calibrated focal length of the camera considered as having a negative sign, X, Y, Z are the ground rectangular coordinates of the corresponding object, X_o, Y_o, Z_o are the initially unknown coordinates of the camera in the ground system, and the a's (also unknown initially) are the direction cosines that indicate the relative angular orientations of the image and ground coordinate axes.

The values of x and y for a set of images are measured (observed) with a comparator, z is considered to be a known constant, and X, Y, Z are the ground coordinates of an object. X_o, Y_o, Z_o constitute the three rectangular coordinates of the camera station as derived during a routine called resection which is explained presently.

Three angles ω, φ, κ constitute the three angular parameters whose values are required for each photograph. These values are related to the a's as follows:

$$A = \begin{pmatrix} a_{11} & a_{12} & a_{13} \\ a_{21} & a_{22} & a_{23} \\ a_{31} & a_{32} & a_{33} \end{pmatrix}$$

$$= \begin{pmatrix} \cos\phi\cos\kappa & \cos\omega\sin\kappa + \sin\omega\sin\phi\cos\kappa & \sin\omega\sin\kappa - \cos\omega\sin\phi\cos\kappa \\ -\cos\phi\sin\kappa & \cos\omega\cos\kappa - \sin\omega\sin\phi\sin\kappa & \sin\omega\cos\kappa + \cos\omega\sin\phi\sin\kappa \\ \sin\phi & -\sin\omega\cos\phi & \cos\omega\cos\phi \end{pmatrix}. \tag{2}$$

Equation 1 constitutes the pair of equations that define a straight line in space which passes through three points: an object at X, Y, Z; the camera station (lens point, or perspective center) at X_o, Y_o, Z_o; and the corresponding image at x, y, z. The equations are said to define a projective transformation. They are used here (see also Schmid, 1959[8]) to establish the fundamental geometric condition on which the photogrammetric analysis is based.

In Equation 1 the terms $\underline{x}$, $\underline{y}$, $\underline{z}$ are considered as known. The first two coordinates are considered to be subject to random accidental errors of observation, but $\underline{z}$ is considered to be a fixed constant.

All the other terms (ω, φ, κ, X_0, Y_0, Z_0, X, Y, Z) are initially unknowns whose values are to be determined. One is primarily interested in $\underline{X}$, $\underline{Y}$, $\underline{Z}$, the ground coordinates of an object; the other six terms are essential intermediate values.

The preliminary programs furnish provisional approximate coordinates $\underline{X}$, $\underline{Y}$, $\underline{Z}$ of all the objects being studied. The first part of the block adjustment computation, called resection, derives approximate values of the six unknowns of each photograph based on these provisional coordinates of 18 objects.

If these provisional values are substituted into Equation 1, the right (computed) side will differ from the left (observed) side. The next step is to adjust each of the nine terms on the right side in a systematic way so that the differences (residuals) between the right and left sides are minimum in accordance with the principles of least squares. The program provides a means to adjust simultaneously the data for 1500 objects imaged on 200 overlapping photographs where some of the objects are weighted geodetic control stations.

Linearized observation (adjustment) equations are derived from Equations 1:

$$(p_{12}\Delta\omega + p_{13}\Delta\varphi + p_{14}\Delta\kappa - p_{15}\Delta X_0 - p_{16}\Delta Y_0 - p_{17}\Delta Z_0 + p_{15}\Delta X + p_{16}\Delta Y + p_{17}\Delta Z)/q = -p_{11}/q$$

$$(p_{22}\Delta\omega + p_{23}\Delta\varphi + p_{24}\Delta\kappa - p_{25}\Delta X_0 - p_{26}\Delta Y_0 - p_{27}\Delta Z_0 + p_{25}\Delta X + p_{26}\Delta Y + p_{27}\Delta Z)/q = -p_{21}/q \qquad (3)$$

where the coefficients $\underline{p_{ij}}$ are defined in determinant notation in Table 1:

Table 1

$$p_{11} = \begin{vmatrix} x & z \\ A_1B & A_3B \end{vmatrix} \qquad p_{21} = \begin{vmatrix} y & z \\ A_2B & A_3B \end{vmatrix}$$

$$p_{12} = \begin{vmatrix} x & z \\ \frac{\partial A_1}{\partial \omega}B & \frac{\partial A_3}{\partial \omega}B \end{vmatrix} \qquad p_{22} = \begin{vmatrix} y & z \\ \frac{\partial A_2}{\partial \omega}B & \frac{\partial A_3}{\partial \omega}B \end{vmatrix}$$

$$p_{13} = \begin{vmatrix} x & z \\ \frac{\partial A_1}{\partial \phi}B & \frac{\partial A_3}{\partial \phi}B \end{vmatrix} \qquad p_{23} = \begin{vmatrix} y & z \\ \frac{\partial A_2}{\partial \phi}B & \frac{\partial A_3}{\partial \phi}B \end{vmatrix}$$

$$p_{14} = \begin{vmatrix} x & z \\ \frac{\partial A_1}{\partial \kappa}B & \frac{\partial A_3}{\partial \kappa}B \end{vmatrix} \qquad p_{24} = \begin{vmatrix} y & z \\ \frac{\partial A_2}{\partial \kappa}B & \frac{\partial A_3}{\partial \kappa}B \end{vmatrix}$$

$$p_{15} = \begin{vmatrix} x & z \\ a_{11} & a_{31} \end{vmatrix} \qquad p_{25} = \begin{vmatrix} y & z \\ a_{21} & a_{31} \end{vmatrix}$$

$$p_{16} = \begin{vmatrix} x & z \\ a_{12} & a_{32} \end{vmatrix} \qquad p_{26} = \begin{vmatrix} y & z \\ a_{22} & a_{32} \end{vmatrix}$$

$$p_{17} = \begin{vmatrix} x & z \\ a_{13} & a_{33} \end{vmatrix} \qquad p_{27} = \begin{vmatrix} y & z \\ a_{23} & a_{33} \end{vmatrix}$$

The term $\underline{q}$ is defined as:

$$q = A_3B = [a_{31}\ a_{32}\ a_{33}] \begin{bmatrix} X - X_o \\ Y - Y_o \\ Z - Z_o \end{bmatrix}.$$

The terms on the right sides of Equation 3 are the residuals $\underline{v_x}$ and $\underline{v_y}$.

The partial derivative terms shown in Table 1 are defined with reference to Equation 2 as follows:

$$\frac{\partial A}{\partial \omega} = \begin{pmatrix} 0 & -\sin\omega\sin\kappa + \cos\omega\sin\phi\cos\kappa & \cos\omega\sin\kappa + \sin\omega\sin\phi\cos\kappa \\ 0 & -\sin\omega\cos\kappa - \cos\omega\sin\phi\sin\kappa & \cos\omega\cos\kappa - \sin\omega\sin\phi\sin\kappa \\ 0 & -\cos\omega\cos\phi & -\sin\omega\cos\phi \end{pmatrix}$$

$$= \begin{pmatrix} 0 & -a_{13} & a_{12} \\ 0 & -a_{23} & a_{22} \\ 0 & -a_{33} & a_{32} \end{pmatrix}$$

$$\frac{\partial A}{d\phi} = \begin{pmatrix} -\sin\phi\cos\kappa & \sin\omega\cos\phi\cos\kappa & -\cos\omega\cos\phi\cos\kappa \\ \sin\phi\sin\kappa & -\sin\omega\cos\phi\sin\kappa & \cos\omega\cos\phi\sin\kappa \\ \cos\phi & \sin\omega\sin\phi & -\cos\omega\sin\phi \end{pmatrix}$$

$$\frac{\partial A}{\partial \kappa} = \begin{pmatrix} -\cos\phi\sin\kappa & \cos\omega\cos\kappa - \sin\omega\sin\phi\sin\kappa & \sin\omega\cos\kappa + \cos\omega\sin\phi\sin\kappa \\ -\cos\phi\cos\kappa & -\cos\omega\sin\kappa - \sin\omega\sin\phi\cos\kappa & -\sin\omega\sin\kappa + \cos\omega\sin\phi\cos\kappa \\ 0 & 0 & 0 \end{pmatrix}$$

$$= \begin{pmatrix} a_{21} & a_{22} & a_{23} \\ -a_{11} & -a_{12} & -a_{13} \\ 0 & 0 & 0 \end{pmatrix}. \qquad (4a)$$

The subscript, as in $(\partial A_1/\partial\omega)B$ and $(\partial A_1/\partial\varphi)B$, is the matrix notation for the scalar product

$$[\partial a_{11}/\partial\omega,\ \partial a_{12}/\partial\omega,\ \partial a_{13}/\partial\omega] \begin{bmatrix} X - X_0 \\ Y - Y_0 \\ Z - Z_0 \end{bmatrix} . \quad (4b)$$

Because the p-coefficients in Equation 3 are evaluated in Table 1 based on approximate values of the nine variables, the results (adjustments to the approximations) from a solution of the equations will also be approximate. But a second solution using the adjusted values will be more favorable, yielding further adjustments which are of smaller size than before. If this sequence (iteration) is repeated, the adjustments eventually become so small that they are insignificant. This program is arbitrarily instructed to terminate when $\Delta\omega$, $\Delta\varphi$, $\Delta\kappa$ are all less than 10^{-5} radian (about 2 arc seconds).

Resection

Resection, as noted above, constitutes a scheme for determining first approximations for ω, φ, κ, X_0, Y_0, Z_0 for each photograph based on the provisional coordinates of 18 objects. The routine is a relatively short one involving only the six unknowns, and is utilized only once for each photograph. The observation equations for resection are nearly identical to Equation 3 except that the terms in X, Y, Z are not present:

$$(p_{12}\Delta\omega + p_{13}\Delta\varphi + p_{14}\Delta\omega - p_{15}\Delta X_0 - p_{16}\Delta Y_0 - p_{17}\Delta Z_0)/q = -p_{11}/q$$

$$(p_{22}\Delta\omega + p_{23}\Delta\varphi + p_{24}\Delta\omega - p_{25}\Delta X_0 - p_{26}\Delta Y_0 - p_{27}\Delta Z_0)/q = -p_{21}/q \quad (5)$$

in which p_{ij} and q have the same formulas as before. The scheme of iteration also applies to resection, terminating when the angular adjustments are less than 10^{-5}.

Furthermore, as soon as the resection routine is completed, the block adjustment observation equations can be formed readily from the resection data that are already in the computer memory because the two solutions utilize the same formulas. Consequently, block adjustment has been referred to as "simultaneous resection", whereas resection is concerned only with independent photographs.

Solution of the Equations

The same modified Gaussian (Gauss-Cholesky) system of elimination is used to solve the system of equations as was used in all of previous publications except that the terms of the equations are located in four submatrices.

It is recognized that large systems of equations treated by this method may not result in a satisfactory solution because of the rounding of numbers arising from repeated multiplications. However, this difficulty is not expected to be significant here because of several factors. Similar solutions in the adjustment of very large networks in classical geodesy have always been satisfactory, as well as no difficulties were encountered in the solution of two previous block adjustments involving 40 photographs each. The computer being used has a 14-digit word length and applies floating point arithmetic, whence a need for double precision is not anticipated. The solution determines minor corrections to data which are already fairly accurate: consequently the corrections are relatively small and the observation equations are essentially linear throughout the range of correction. Each repetition or iteration is based on a new set of coefficients which, in turn, are based on corrected values of the parameters. It has been noted in tests by desk calculator that the average size of the corrections on any iteration is about one-tenth the size on the previous iteration. Evidently a system would continue to converge rapidly so long as the leading one or two significant digits of the corrections remain undamaged by the encroachment of roundoff discrepancies.

Unknowns and Control

The number of unknowns and simultaneous equations is large indeed. As each image yields two observation equations (Equation 3), a total of 3600 such equations are involved in 200 photographs of 18 points each. Each photograph contains 6 unknowns for a total of about 1200 if the photographic overlap is 60 per cent in both directions and the area is approximately square. The total of 2000 unknowns is essentially for a total of 5700 unknowns which might be approached if the side overlap is 30 per cent and the area differs from a square shape.

The procedure does not yield a solution unless control data are enforced by the weighting system. Minimum control (the unique case) occurs if two horizontal positions and three elevations are used. The accuracy of the system improves with an increase in the number of control points. It is considered that the perimeter of the area should contain a scheme of horizontal control points, with more in the interior if possible. A perimeter spacing of five photographs per point may be adequate for many applications. The number of vertical control points should be perhaps double the horizontal, and should include regularly spaced interior points in view of the fact that the geometric accuracy in the vertical direction is inherently inferior to the horizontal accuracy.

Weighted Observations

The program provides for two kinds of weighting. Each pair of observation equations can be weighted if desired relative to the distance the image lies from the center of the photograph as it is realized that image resolution degrades with radial distance. Advantage is taken of the fact that the images are ordinarily selected near specific locations: near the center, near the mid-sides, and near the corners. No decision has yet been made as to what weight values will be employed, but it is expected that they will differ only slightly from unity.

Control points are weighted in two distinct manners which may seem to differ somewhat from the classic weighting and condition equations used in geodetic computations. One type of weight (collineation weight) is simply a factor which is used to multiply all the terms of the pair of observation equations. It was found that without this weight the residual errors at control stations were frequently larger than those at pass points nearby, a condition that is attributed to the fact that the number of pass points normally exceeds considerably the number of control points. The value of the weight can be selected by the photogrammetrist in accordance with the specific operational conditions of the project, such as targeted or untargeted control stations.

The other kind of control weight (position weight) consists of factors which multiply appropriate diagonal coefficients in the set of normal equations. A different number may be used for the X and Y terms than the Z term. The effect of this type of weight is to control the degree of agreement with control data. A large number, such as 100, causes essentially exact agreement: if a control point is known to have an inferior order of accuracy, the agreement can be allowed to deviate a small amount by using a relatively smaller number.

Special provisions are not included for weighting "tie" points because the program is designed primarily for a side overlap of 60 per cent which eliminates the need for tie points. ("Tie" points are common images specially selected on overlapping strips of photographs where the pass points of one strip do not fall in appropriate locations in an adjoining strip necessitating that the pass points for the two strips be selected independently.) Nevertheless, where 30 per cent side overlap is encountered, tie points can be weighted by (a) modifying the program accordingly, or (b) duplicating the image input card as many times as one considers appropriate. The reason for weighting tie points is that sometimes the residual discrepancies have a tendency to become unacceptably large because the equations are outnumbered by the pass point equations which dominate the adjustment.

Intersection

Intersection is the name of the solution that yields the ground $\underline{X}$, $\underline{Y}$, $\underline{Z}$ of an object based on known image coordinates, camera stations, and orientation data for two (or more) photographs. The subject was discussed in Reference 1 under Equations 25, 26, and 27, and in Reference 4 under Equation 6. Here, however, the method of solution has been modified in order to accommodate any number of photographs in any juxtaposition. Previously it had been assumed that the air base was parallel to the $\underline{X}$-axis: but this assumption is not valid in a free block adjustment. Moreover, an object may be imaged on more than two photographs, and it is desirable to include all the observations in order to obtain a rigorous solution which minimizes the observation discrepancies.

The collinearity Equation 1 can also be expressed in determinant and metrix form as in the reference:

$$\begin{vmatrix} x & z \\ (A_1 . B) & (A_3 . B) \end{vmatrix} = 0 \qquad (=p_{11})$$

$$\begin{vmatrix} y & z \\ (A_2 . B) & (A_3 . B) \end{vmatrix} = 0 \qquad (=p_{21})$$

or

$$(A_3 . B)\ x - (A_1 . B)\ z = 0$$

$$(A_3 . B)\ y - (A_2 . B)\ z = 0\ . \qquad (6)$$

A plate residual $\underline{v}$ may be defined as

$$v_x = x_{observed} - x_{computed}\ . \qquad (7)$$

The computed coordinates are expressed by Equations 6, and are, explicitly,

$$x = z\ (A_1 . B)/(A_3 . B)$$

$$y = z\ (A_2 . B)/(A_3 . B)\ . \qquad (8)$$

If Equations 8 are substituted into 7,

$$v_x = x - z\ (A_1.B)/(A_3.B)$$

$$v_y = y - z\ (A_2.B)/(A_3.B)\ . \qquad (9)$$

If both equations are multiplied by $(A_3.B)$ (a scalar product which represents the height of the camera above the object),

$$(A_3.B)\ v_x = (A_3.B)\ x - (A_1.B)\ z$$

$$(A_3.B)\ v_y = (A_3.B)\ y - (A_2.B)\ z\ . \qquad (10)$$

The term $(A_3.B)$ varies from photograph to photograph. Consequently, each of the two to nine pairs of observations Equations 9 and 10 has a unique multiplier. This fact has little significance except in instances where the flying heights differ significantly -- they may well differ a considerable amount for adjacent flight lines and for extra cross flights purposely taken at different heights.

If the right side of Equations 10 are expressed in terms of $\underline{X}$, $\underline{Y}$, $\underline{Z}$, the $\underline{p}$-terms are as stated in Table 1, and $\underline{q} = (A_3.B)$, then the observation equations for intersection are:

$$v_x = (p_{15}X+p_{16}Y+p_{17}Z)/q - (p_{15}X_0+p_{16}Y_0+p_{17}Z_0)/q$$

$$v_y = (p_{25}X+p_{26}Y+p_{27}Z)/q - (p_{25}X_0+p_{26}Y_0+p_{27}Z_0)/q\ . \qquad (11)$$

The terms $\underline{v_x}$ and $\underline{v_y}$ are set equal to zero and the "constant" terms are transposed to the right side of the equal sign:

$$(p_{15}X+p_{16}Y+p_{17}Z)/q = (p_{15}X_0+p_{16}Y_0+p_{17}Z_0)/q$$

$$(p_{25}X+p_{26}Y+p_{27}Z)/q = (p_{25}X_0+p_{26}Y_0+p_{27}Z_0)/q\ . \qquad (12)$$

A scheme for the actual solution of a set of Equations 12 involves two (or more) iterations where it is assumed that $\underline{q} = 1$ in the initial solution,

which yields fair values for X, Y, Z. In the succeeding iterations, q has the value A_3B. A possible test for termination is when the change in microns for both X and Y on successive iterations is insignificantly small, such as less than one-tenth micron (10^{-7} meter). The scale factor is $f/(A_3.B)$.

The intersection computation is accomplished through the application of Subroutine Insect written in Fortran at the end of the Program. The input and computation are performed after the main block adjustment is completed, using the adjusted camera data already in the memory. The input are presorted so that all the data relative to each given object are together, but the card sequence within each set is immaterial. The data for each object are input, computed, and output before the data for the next object are input; consequently the intersection problem can be computed for an unlimited number of objects. The number of photo images associated with each object is also virtually unlimited because the relevant computer array will accommodate as many as 100 images although 9 is the maximum number usually encountered with 60 per cent side overlap.

Features of the Program

Some of the features and limitations of this version of the block adjustment program are considered to be pertinent to this report in view of the fact that the program is continually being revised and added to.

In addition to this 200-photograph version, programs are also in current operation for 20 and for 185 photographs. Other versions will probably be added in the future for 50 or for 100 photographs. The reason for the special sizes is related to the large amount of computer time required for a solution; the time is reduced considerably if some of the storage arrays on disk can be eliminated by retaining the data in core memory. Because the core memory capacity is completely used in the 200-photograph version with additional data stored on disk, and because disk operations are relatively slow (compared to core), any large reduction in the dimensions needed for the arrays allows the programmer the opportunity of reducing the disk look-up operations. (This report documents the 200 photograph version as though it was "frozen" in February 1967.)

The present program constitutes, in a sense, a "skeleton" type of solution to which may be added numerous features in the future. The urgency in producing a practical operating system for the immediate use of the Coast and Geodetic Survey precluded the addition of some convenient features in the initial version. Consequently, the program containing only the necessary features was made available early in 1966 in ample time for a very large adjustment that had been scheduled. Moreover, the program minimizes the amount of human effort ordinarily needed in setting up a computation, although it is now recognized that it may be profitable to devote further study to some of the details of optimization in future versions.

The program is based entirely on the collineation principle. The ground coordinates of the pass-points, control stations, and other points as desired, are included as a part of the main scheme of the adjustment. Although the inclusion of these parameters causes the matrix to be very large, the benefit to the rigor of the adjustment is considered to be worthwhile.

Nevertheless, an intersection routine is included outside of the main adjustment scheme to determine the coordinates of "other" or "extra" points which are not considered to be necessary to the adjustment. The 18 pass points per photograph in addition to the control points are considered to provide sufficient data on which to base a rigorous adjustment. The intersection routine (also based on the collineation principle) is then applied, based on the adjusted data after the main adjustment has been completed. Incidently, observed image coordinate data from all the pertinent photographs are utilized in a least-squares manner.

This block adjustment system is independent from the relative configuration of the photographs that comprise the block. For example, the block can consist of a single strip, overlapping strips, intersecting strips, cross flights, photographs taken from different cameras, and photographs taken from different altitudes -- all with very little human pre-organization by the photogrammetrists. The organization of the computation is embodied in the program and is based to a large extent on the image numbering system.

The block adjustment itself is a single-pass computation, although three low-cost preliminary programs (three-photo, strip adjustment, earth curvature transformation) are employed. Needless to say, all these programs can possibly be combined if deemed necessary and if computer memory capacity is available. However, the first two preliminary programs are very useful for detecting and eliminating blunders in the data before the comparatively expensive block adjustment is attempted; this results in a minimum number of iterations. (Recent adjustments have required only a single iteration.)

The recognition of all known sources of systematic errors is included in the first preliminary program. That program can readily be modified to include any new information relative to the lens, film, comparator, atmosphere, etc.

Although a partly-empirical polynomial fitting is used in the strip adjustment preliminary program, the polynomial does not influence the accuracy of the block adjustment except as it may increase or decrease the number of iterations that may be required.

The preliminary program for earth curvature (secant plane) transformation has not yet been published. However, the routine has recently been reprogrammed for the same IBM-7030 computer to conform to the desired input and output formats, and to include all the standard plane coordinates systems used in the United States, including the UTM system. This program can be obtained on request. For local projects of relatively small extent (less than 100 miles), a special simplified transformation might be more appropriate.

A Gauss-Cholesky direct system of elimination is used to solve the large system of normal equations. No roundoff difficulties have been experienced to date. The system of normal equations is separated into unconventional subdivisions in order to reduce the storage problem. The inverse matrix per se is not derived although an economical routine has been programmed for other work in the organization. This is one of the features that may be added in the near future.

The language of the program is Fortran IV which facilitates revisions, modifications, and communication within the Coast and Geodetic Survey, as well as possibly facilitating the use by others of the program as a whole or in part.

Every effort is made throughout the program to cause the results to be as accurate as possible; approximations are included only where they are considered to have no influence on the final accuracy of the adjustment. The purpose in maintaining high accuracy is considered necessary if

analytic aerotriangulation is to be used to complement geodetic surveying for the establishment of (lower-order) control.

Some of the features that are scheduled to be added to the program, or modifications, are mentioned briefly.

(a) The incorporation of auxiliary control data in the adjustment includes: a control (electronic) distance measurement between any two identifiable objects; a corresponding control azimuth, such as by a solar or polaris observation; aircraft altimeter observations; solar camera data: etc. The first two have already been formulated and await programming.

(b) Inversion of the equation matrix, and a study and utilization of the data are contemplated, probably for a short version of the program. It seems that insufficient data are available at the present time for a knowledgeable assignment of values for the various weight factors.

(c) The adjustment of the Z-coordinate is scheduled to be modified so that the elevation is maintained instead of the Z-coordinate. Small horizontal discrepancies can occur if the project area extends more than 100 miles and if the adjustments are large.

(d) Versions of the program will probably be modified in the near future for use on other computers, in particular, on the CDC-6600.

(e) Efforts are being turned toward eliminating or including the preliminary programs, probably for a curtailed version of the block adjustment, such as for 50 photographs where the cost of an additional iteration or two is relatively small. For example, the present program will continue to work with equal accuracy even if the provisional ground coordinates have large discrepancies, such as would be produced if one estimated their values, or as might be computed through the use of crude linear formulas. Corrections to image coordinates for systematic errors would need to be transferred to the present program, as well as some version of the earth-curvature transformation, and an analysis for the elimination of blunders, but the strip adjustment program can be eliminated entirely. The reason for such effort is to reduce or eliminate the human effort consumed in conducting the preliminary computations.

Safeguards on Computer Time

Several items are included in the program to prevent unnecessary use of computer time in the event of grossly erroneous input data. Experience indicates that blunders in input data occur even though safeguards are provided in the preliminary programs. At the present cost of computer time, it is of important economical significance that even one extra iteration of an adjustment of a large number (e.g., 50) of photographs be avoided if at all possible.

If any resection solution requires more than five iterations (which may happen if the points on the ground lie on or near a common sphere or cylinder which also includes the camera station), (a) that resection solution is terminated, (b) the number of the photograph is output with an appropriate error message, (c) the solution continues for the next photograph, and (d) the entire procedure is terminated after the completion of the resection solution of the last photograph but before the general adjustment is attempted. This allows a photogrammetrist to rectify the situation with a minimum waste of computer time, and restart the computation later.

Although the solution is usually completed at the end of two or three iterations, the photogrammetrist can instruct the computer (MAX on line 18 of the Fortran program in Appendix 2) to terminate the general adjustment at any number of iterations and output the incompletely adjusted data as though the solution is finished. The photogrammetrist can inspect the output and modify the input if necessary where the data indicate that the solution is not progressing in a normal manner. As an example, a very larger initial adjustment of an orientation angle of a camera, such as $\sin^{-1}0.2$, may occur where the adjustment is normally expected to be only one-tenth or one-hundredth as large.

These kinds of situations do occur from time to time in practice due to human input blunders which may otherwise be very difficult to detect beforehand. If the general solution is allowed to progress to completion, several extra iterations will normally be required to achieve a solution which only will be recognized as useless and

thrown away. On the other hand, if the output data indicate that the solution is normal, the partly-adjusted coordinates can be input again at a later time and the adjustment continued for one or more iterations with only a minor cost of extra computer effort.

A further occasion for the use of this latter technique consists of accepting a given iteration as final even though the 10^{-5} convergence limit may not have been achieved. This may occur in at least three kinds of circumstances: (1) where the largest adjustment is only slightly larger than 10^{-5}: (2) where the projected utilization of the output data does not require such a high accuracy: and (3) where the estimated accuracy of the input data does not warrant another iteration.

As is customary with long computations of this nature, restart commands are incorporated after each approximately 15 minutes of running time. All the core data are dumped onto disk in such a manner that, in the event of a computer malfunction (such as the failure of a parity check), the computation can be aborted, and restarted at the most recent memory dump instead of beginning the computation from the very first. The restart features were added by expert programmers of the Computing Division: as they do not constitute photogrammetry and aren't well understood by the authors, they are not discussed in detail. Needless to say, short versions of the program do not include restart features, nor are they necessary where the computation can be programmed on a larger or faster computer to run in a very short time.

Description of Dimensioned Arrays

The ten data storage arrays are discussed in alphabetic order instead of the order listed in the Dimension statement of the Fortran program (Appendix 2).

A(6, 1500) -- (lines 94, 325, 484)

The A-array is used in three different modes. After each utilization, the data are transferred either to the G-array and thence onto disk storage, or directly onto disk storage.

(1) The first utilization consists of a record list of object data (like E-array) for the entire block in the order encountered in the solution: Row 1--object number; Row 2--X-coordinate; Row 3--Y-coordinate; Row 4--Z-coordinate; Row 5--horizontal weight; Row 6--vertical weight. The E-array is formed by transferring data for one photograph from the G-array in the order established by the B-array; the A-array is then formed by successively transferring from the E-arrays those data not already in A in the order encountered in the E-arrays. Beginning with line 241, the order list is transferred to the G-array and thence onto disk storage.

(2) The second utilization (line 325) pertains to the intermediate storage of the normal equation coefficients of the corrections to the three coordinates of each ground object used in the adjustment. These coefficients are called the Z1-terms which are discussed more fully presently during the description of the P-array. Six Z1-terms (coefficients of ΔX, ΔY, ΔZ) occur for each object, and the terms for one object occupy the six rows in each column of the A-array. These six terms form a "stairstep" arrangement in the "classic" form of the normal equation matrix. The three terms in the first row of Z1 are stored in the first three rows of A, the two terms in the second row of Z1 are stored in rows four and five of A, and the final term in Z1 is in the sixth row of A.

(3) The third utilization of the A-array (line 484) occurs during the forward solution of the normal equations when Z3 data (which were previously stored in the G-array and transferred to disk) are brought back from disk storage. A 6 x 6 area in A is assigned to each of 200 photographs. Originally, only a specific 21 of the 36 words are used as depicted in the "stairstep" area in the Z3 area of Table 2 and Figure 2 as described presently during the discussion of the P-array. Perhaps the easiest way of describing the arrangement of the terms in A is to state that they are exactly as shown in Table 3 where the terms below the principal diagonal are zeros. However, the A-array extends from the diagonal (Figure 2) to the right completely across the cross-hatched portion of the Z3-area. The left-most dotted portions are always non-zero although the cross-hatched portions are zero if the photographs involved do not overlap. The contents of the A-array is stored back on disk on line 533. The A-array is again used during the Back Solution of the normal equations beginning on line 628. (Figure 2 in on page 4B)

B(51, 3) -- (line 34 of source program)

Image coordinate data for one photograph are contained in the B-array. The three items for each image are: (1) a nine-digit image identification number: (2) the refined[2] image x-coordinate: and (3) the refined image y-coordinate. The first 18 rows are for the 18 primary pass-point images in the same strict order as specified in Reference 3 and 4. The next 31 rows (or any lesser number of them which may be needed) contain the same information in any unsegregated order for all the control point images that appear on the photograph and the other pass points whose influence is desired in the adjustment. ("Other Objects" whose influences are not wanted are handled in a post facto manner by Subroutine Insect after Line 755.)

The last two rows contain miscellaneous elements: B(50, 1) -- photograph number; B(50, 2) -- a positive digit indicating that a photograph is the beginning of a strip; B(50, 3) -- a positive digit indicating that a photograph is the end of a strip; B(51, 1) -- a positive digit indicating that a

Table 2. The contents of the P-array

	1	2	3	4	5	6	7	8	9	10	
1	p_{11}	p_{12}	p_{13}	p_{14}	$-p_{15}$	$-p_{16}$	$-p_{17}$	$-p_{11}$		$(v^2{}_x)$	For both resection and block adjustment
2	p_{21}	p_{22}	p_{23}	p_{24}	$-p_{25}$	$-p_{26}$	$-p_{27}$	$-p_{21}$		$(v^2{}_y)$	
3	p_{15}	p_{16}	p_{17}	p_{12}	p_{13}	p_{14}	$-p_{15}$	$-p_{16}$	$-p_{17}$	$-p_{11}$	
4	p_{25}	p_{26}	p_{27}	p_{22}	p_{23}	p_{24}	$-p_{25}$	$-p_{26}$	$-p_{27}$	$-p_{21}$	
5											
6		Z_1-area				Z-area					
7											
8											
9										Z_2-area	For block adjustment
10		(Empty)						Z_3-area			
11											
12											
13											

Table 3. The contents of the C-array

	1	2	3
1	X_o	Y_o	Z_o
2	$\sin \omega$	$\sin \varphi$	$\sin \kappa$
3	$\cos \omega$	$\cos \varphi$	$\cos \kappa$
4	The nine elements of		
5	the orientation matrix $\underline{A}$		
6	shown in Equation 2.		
7			
8		$\partial A/\partial \omega$	
9			
10			
11		$\partial A/\partial \varphi$	(Equations 4a)
12			
13			
14		$\partial A/\partial \kappa$	
15			
16	$\underline{B}$: $X-X_o$	$Y-Y_o$	$Z-Z_o$
17	$A_i B$		
18	$(\partial A_i/\partial \omega) B$		
19	$(\partial A_i/\partial \varphi) B$	(Equation 4b)	
20	$(\partial A_i/\partial \kappa) B$		

photograph is the last one in the block: B(51, 2) -- the focal length for this photograph: and B(51, 3) -- the total number of images listed for the subject photograph. The B-array is transferred to disk storage photograph by photograph (Line 45).

C(20, 3) -- (line 111)

These auxiliary computational data are needed for deriving the p-coefficients of the observation equations (Equation 3) arranged as shown in Table 3. The first three rows are initially approximated as a part of the solution (Line 114), are corrected (Line 219), and stored in the CAM-array (Line 223) for subsequent utilization.

CAM(200, 60) -- (line 223)

This storage consists of (1) the values of the six parameters of each photograph, and (2) the list of objects numbers ≤ 49 corresponding to the images. One row is assigned to each of the 200 photographs in the order in which they are input. The data in the columns are: 1--photograph number; 2-7--sin ω, sin φ, sin κ, X_o, Y_o, Z_o; 8-56--the list of object numbers in the same order as the image input: 57--the total number of objects used on the photograph (49 is maximum); 58-60--cos ω, cos φ, cos κ.

D(6, 7) -- (line 185)

The formation and solution of the six normal equations used in Resection are accomplished in the D-array. The data come from the P-array already discussed, and the "answers" (adjustments to the six camera parameters) are formed in rows 1 through 6 of the 7th column in the order ω, φ, κ, X_o, Y_o, Z_o.

E(49, 6) -- (line 46)

The object data for one photograph consist of: (1) object identification number; (2) provisional X-coordinate in secant plane system from the preliminary programs; (3) Y-coordinate; (4) Z-coordinate; (5) horizontal weight number (unit weight if a pass point; otherwise if a

control point): and (6) vertical weight number. These data are extracted from the G-array or the A-array for those points that are imaged on a particular photograph as indicated by the identification numbers listed in the B-array.

G(10236) -- (line 23)

The G-array contains the contributions to the constant terms (Z_2 in P-array) of the block normal equation matrix, object number order list with horizontal and vertical weight factors and contribution of Z_3-coefficients (P-array, already discussed) of camera parameters in block normal equation matrix. The single-rowed list includes: (1) 5700 places for the constant terms of as many (or fewer) normal equations; (2) the object order list of the A-array (discussed above) includes three items for each object--(a) the object identification number, (b) the horizontal weight factor, and (c) the vertical weight factor--for the maximum of 1500 objects; (3) the coefficients of the 21 camera parameter terms for one photograph.

P(13, 10) -- (line 177ff)

The coefficients of observation Equations 3 for resection, and "marshalling yard" for contribution of one image to system of normal equations for block adjustment (Table 2) are formed and momentarily stored in the P-array. The Z-areas of the P-array refer to the Z-arrays which are discussed presently: they constitute contributions to the four unconventional subdivisions of the block system of normal equations. For the resection problem the first 2 rows, columns 2 through 8, constitute a complete pair of observation equations for an image. For the block solution, the coefficients are stored initially in the first 2 rows (as in resection) but are transferred to all 10 columns of rows 3 and 4 to form a complete pair of observation equations for the block problem.

Figure 2 and Table 2 depict in an oversimplified manner the so-called classical arrangement of a set of normal equations that might be encountered in block aerotriangulation.

The purpose of the figure is to help define the areas Z, Z1, Z2, Z3 of the P-array. The shaded and dotted areas denote numerical coefficients and the blank areas indicate zero coefficients, or the absence of coefficients.

Z1 refers to the coefficients of the ΔX, ΔY, ΔZ terms associated with each object. Each "stairstep" set includes six numbers which are virtually independent from every other set. The six terms are stored in one column of the A-array before being transferred to disk. The order of storage in A is: the three terms of the first row, the two terms of the second row, and finally the single term of the third row.

Z2 refers to the list of "constant" terms, one for each equation. The values are transferred to their proper locations in the first 5700 places in the G-array and remain in core storage.

Z3 are coefficients of the camera parameters. The dotted portions are always nonzero and are generated during the formation of the normal equation; the cross-hatched portion may be zero if the photographs concerned do not overlap and are generated during the forward solution of the normal equations. The values are transferred to appropriate places in the G-array, and thence to disk storage. Eventually the values are brought back to the A-array where the arrangement is just like that shown in the bottom part of Table 2.

The simple Z-area in Table 2 and Figure 2 refer to the coefficients produced by the products of the object terms and camera terms during the formation of the normal equations. The dotted areas are filled with non-zero values and the blank areas are zero. These data are transferred to the Z-array before being stored on disk, and are also stored in the Y-array as needed during the forward solution of the system of equations.

Y(147, 6) -- (line 520)

The Y-array is a duplicate of the Z-array discussed next. It is used during the solution of the normal equations when Z is full to hold the data brought from disk.

Z(147, 6) -- (line 337)

The partial normal equation terms for one photograph are transferred from Z-portion of P-array as each pair of observation equations for an image is completed. The six columns are for the coefficients of $\Delta\omega$, $\Delta\varphi$, $\Delta\kappa$, ΔX_0, ΔY_0, ΔZ_0. Each image requires three rows corresponding to the terms ΔX, ΔY, ΔZ. At the completion of each photograph, the data are transferred to disk. ("Partial" is used here to indicate an intermediate phase in the accumulation of the complete normal equation coefficients.) The relationship of the Z-array, the P-array, and the Z1, Z2, Z3 terms are discussed above with the P-array.

Appendix 1.

SIMULTANEOUS ADJUSTMENT

OF AS MANY AS 200 PHOTOGRAPHS

USING THE C&GS ANALYTIC

AEROTRIANGULATION PROGRAM

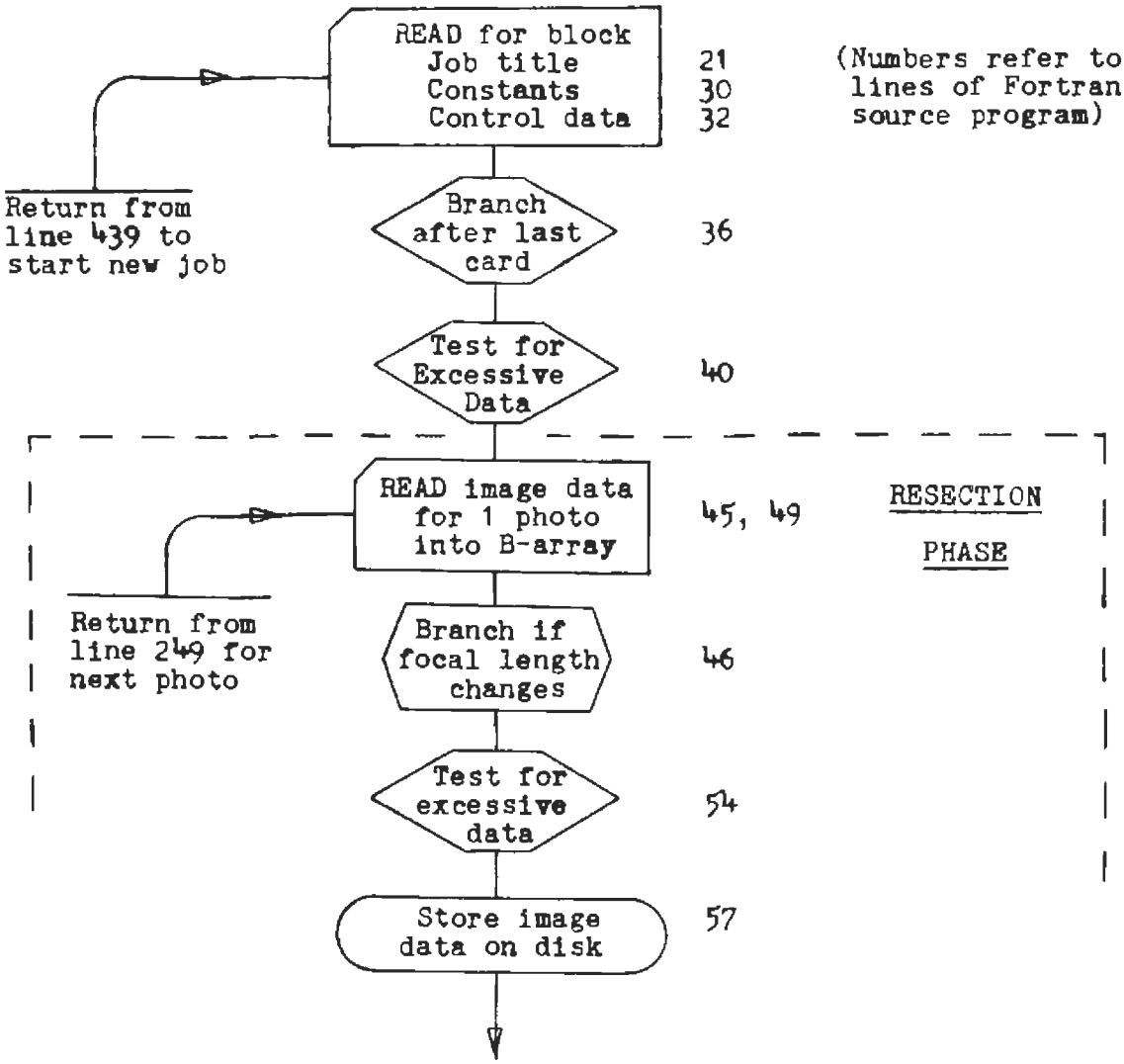

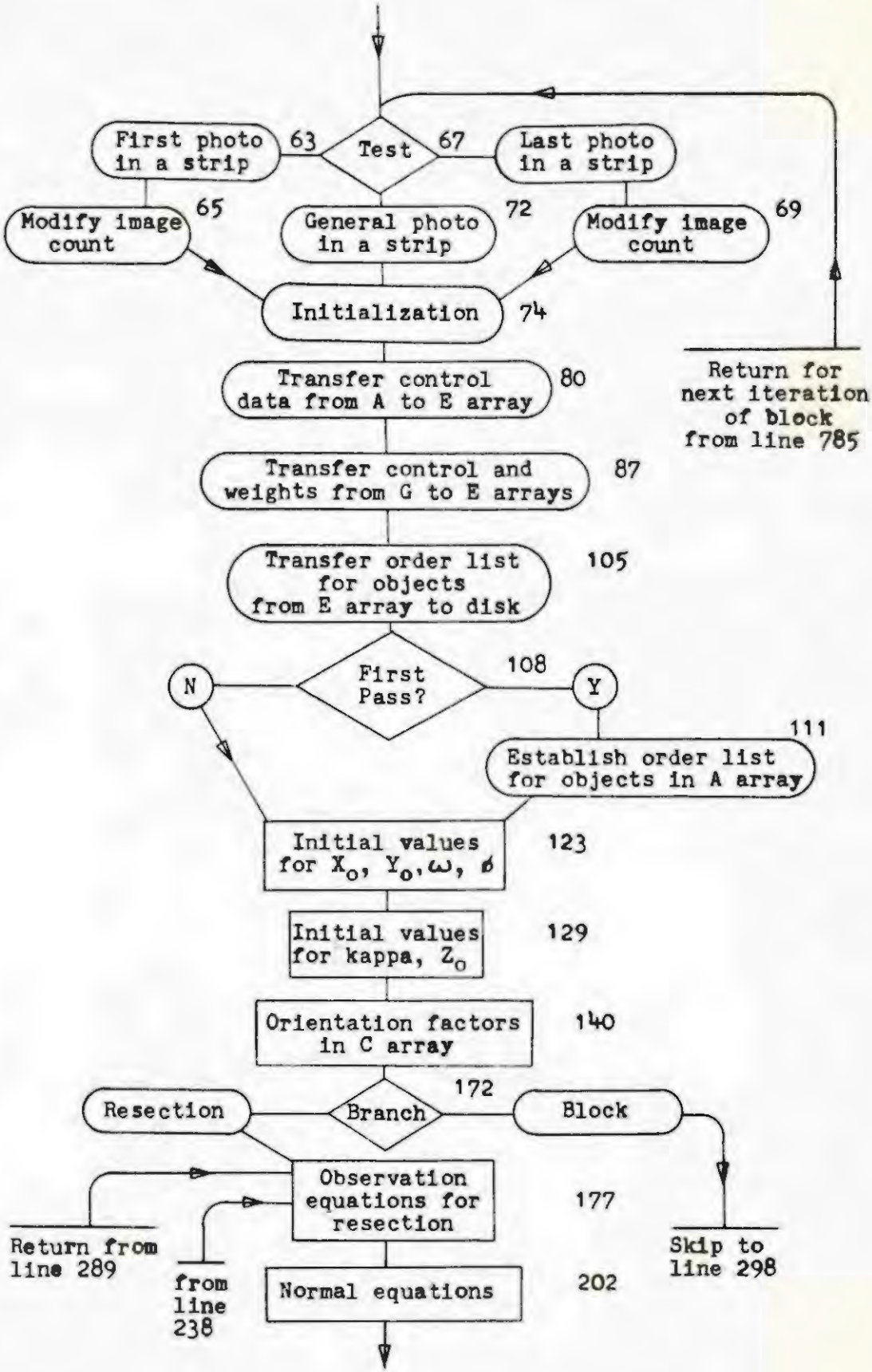
First photo in a strip
63
Test
67
Last photo in a strip
Modify image count
65
General photo in a strip
72
Modify image count
69
Initialization
74
Transfer control data from A to E array
80
Return for next iteration of block from line 785
Transfer control and weights from G to E arrays
87
Transfer order list for objects from E array to disk
105
First Pass?
108
N
Y
111
Establish order list for objects in A array
Initial values for X_o, Y_o, ω, ϕ
123
Initial values for kappa, Z_o
129
Orientation factors in C array
140
Branch
172
Resection
Block
Observation equations for resection
177
Return from line 289
from line 238
Skip to line 298
Normal equations
202

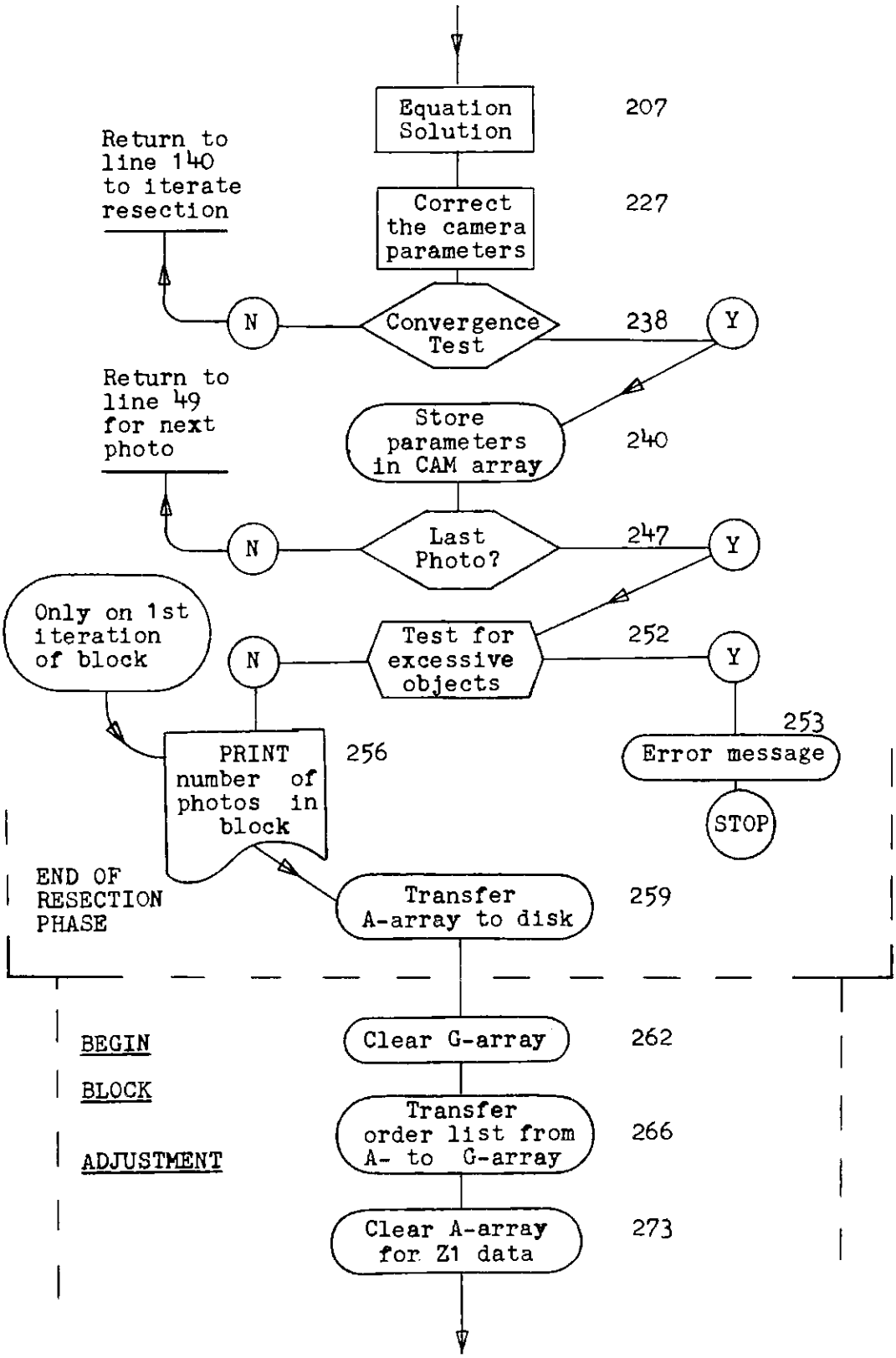
Equation Solution
207
Return to line 140 to iterate resection
Correct the camera parameters
227
N
Convergence Test
238
Y
Return to line 49 for next photo
Store parameters in CAM array
240
N
Last Photo?
247
Y
Only on 1st iteration of block
N
Test for excessive objects
252
Y
253
PRINT number of photos in block
256
Error message
STOP
END OF RESECTION PHASE
Transfer A-array to disk
259
BEGIN
BLOCK
ADJUSTMENT
Clear G-array
262
Transfer order list from A- to G-array
266
Clear A-array for Z1 data
273

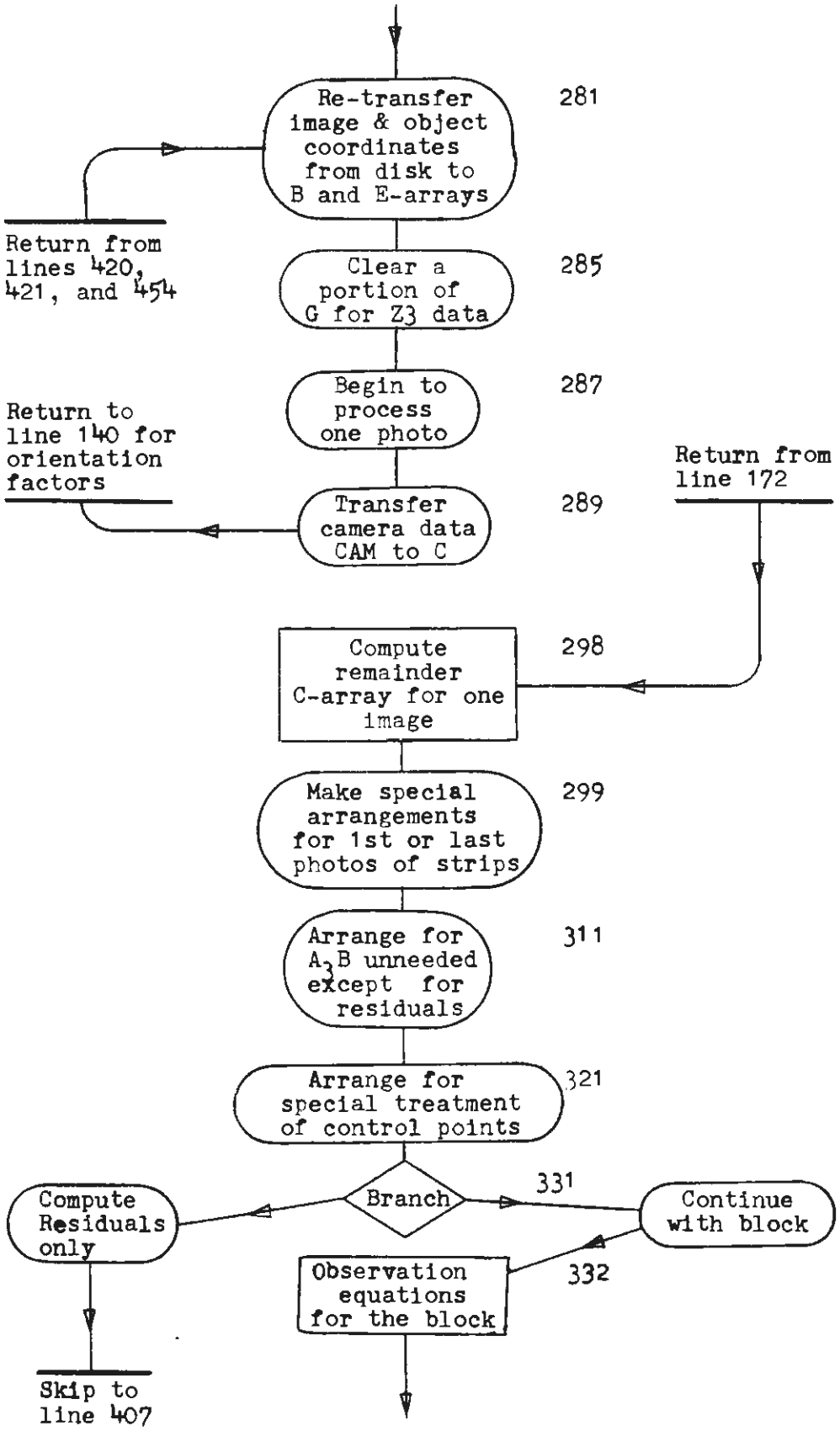
Re-transfer image & object coordinates from disk to B and E-arrays
281
Return from lines 420, 421, and 454
Clear a portion of G for Z3 data
285
Begin to process one photo
287
Return to line 140 for orientation factors
Transfer camera data CAM to C
289
Return from line 172
Compute remainder C-array for one image
298
Make special arrangements for 1st or last photos of strips
299
Arrange for A3 B unneeded except for residuals
311
Arrange for special treatment of control points
321
Branch
331
Compute Residuals only
Continue with block
Observation equations for the block
332
Skip to line 407

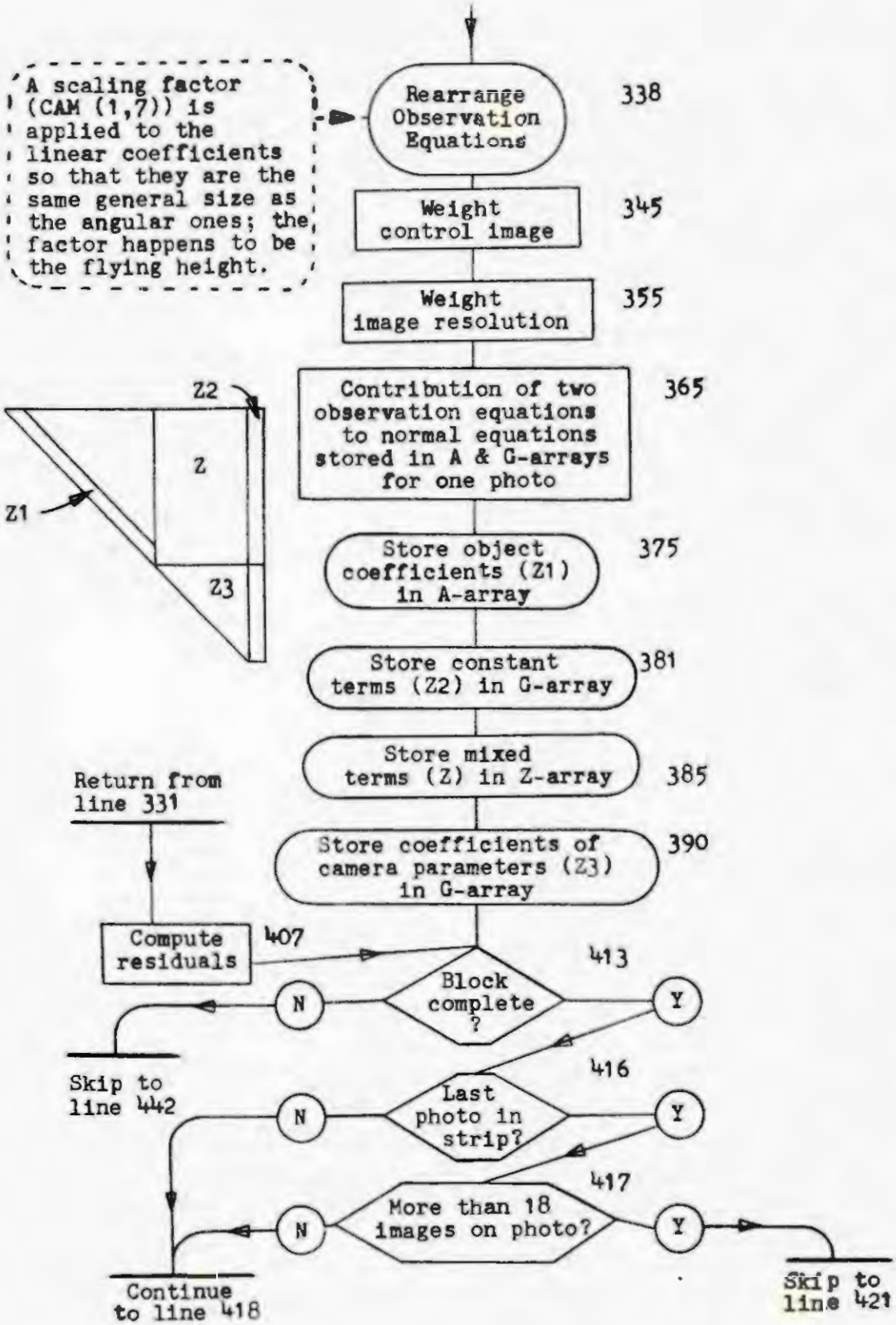
A scaling factor (CAM (1,7)) is applied to the linear coefficients so that they are the same general size as the angular ones; the factor happens to be the flying height.
Rearrange Observation Equations
338
Weight control image
345
Weight image resolution
355
Contribution of two observation equations to normal equations stored in A & G-arrays for one photo
365
Z2
Z
Z1
Z3
Store object coefficients (Z1) in A-array
375
Store constant terms (Z2) in G-array
381
Store mixed terms (Z) in Z-array
385
Store coefficients of camera parameters (Z3) in G-array
390
Return from line 331
Compute residuals
407
Block complete ?
413
N
Y
Skip to line 442
Last photo in strip?
416
N
Y
More than 18 images on photo?
417
N
Y
Continue to line 418
Skip to line 421

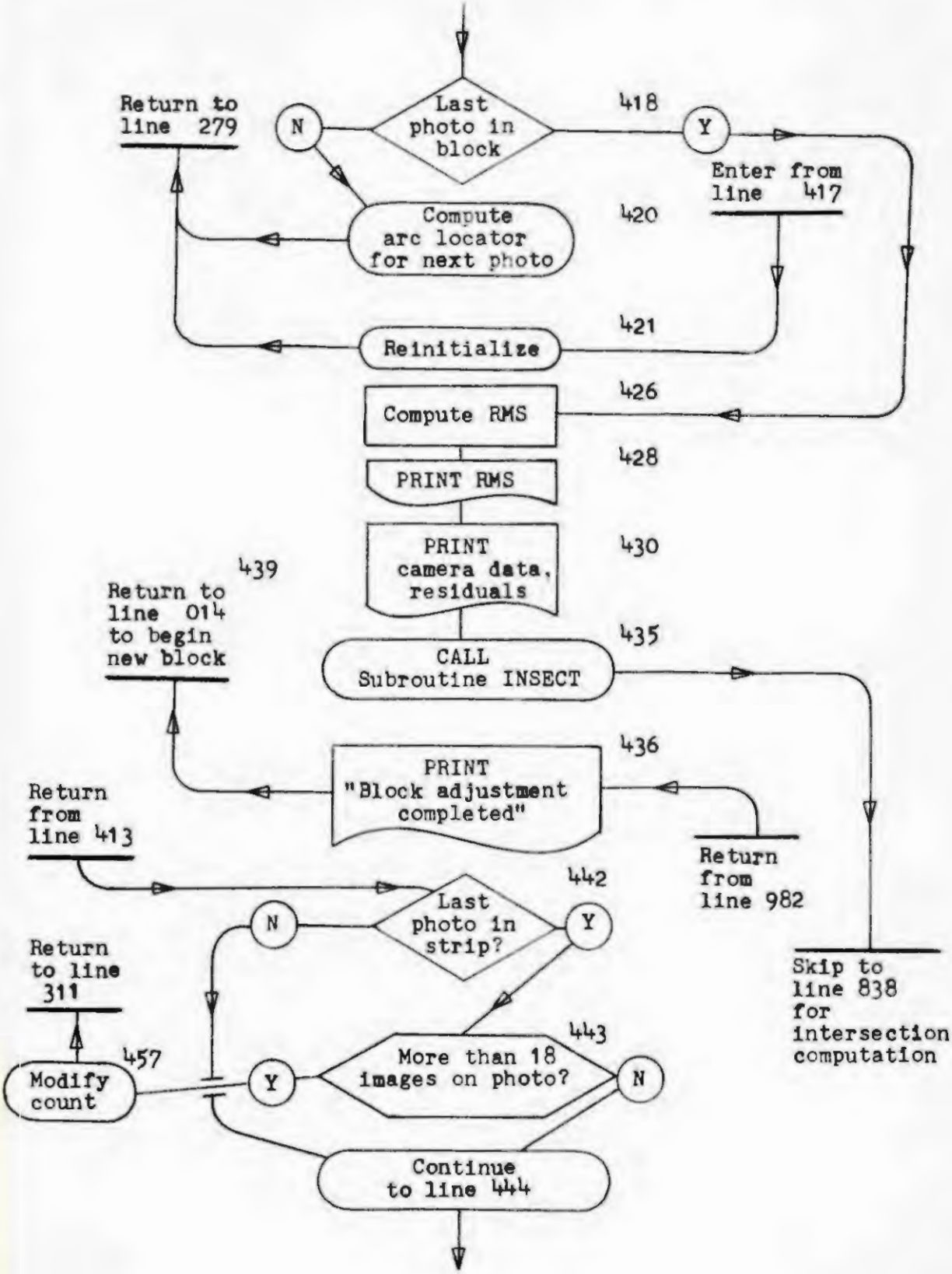
Last photo in block
418
Y
N
Return to line 279
Enter from line 417
Compute arc locator for next photo
420
Reinitialize
421
Compute RMS
426
PRINT RMS
428
PRINT camera data, residuals
430
439
Return to line 014 to begin new block
CALL Subroutine INSECT
435
PRINT "Block adjustment completed"
436
Return from line 413
Return from line 982
Last photo in strip?
442
Return to line 311
Skip to line 838 for intersection computation
More than 18 images on photo?
443
457
Modify count
Continue to line 444

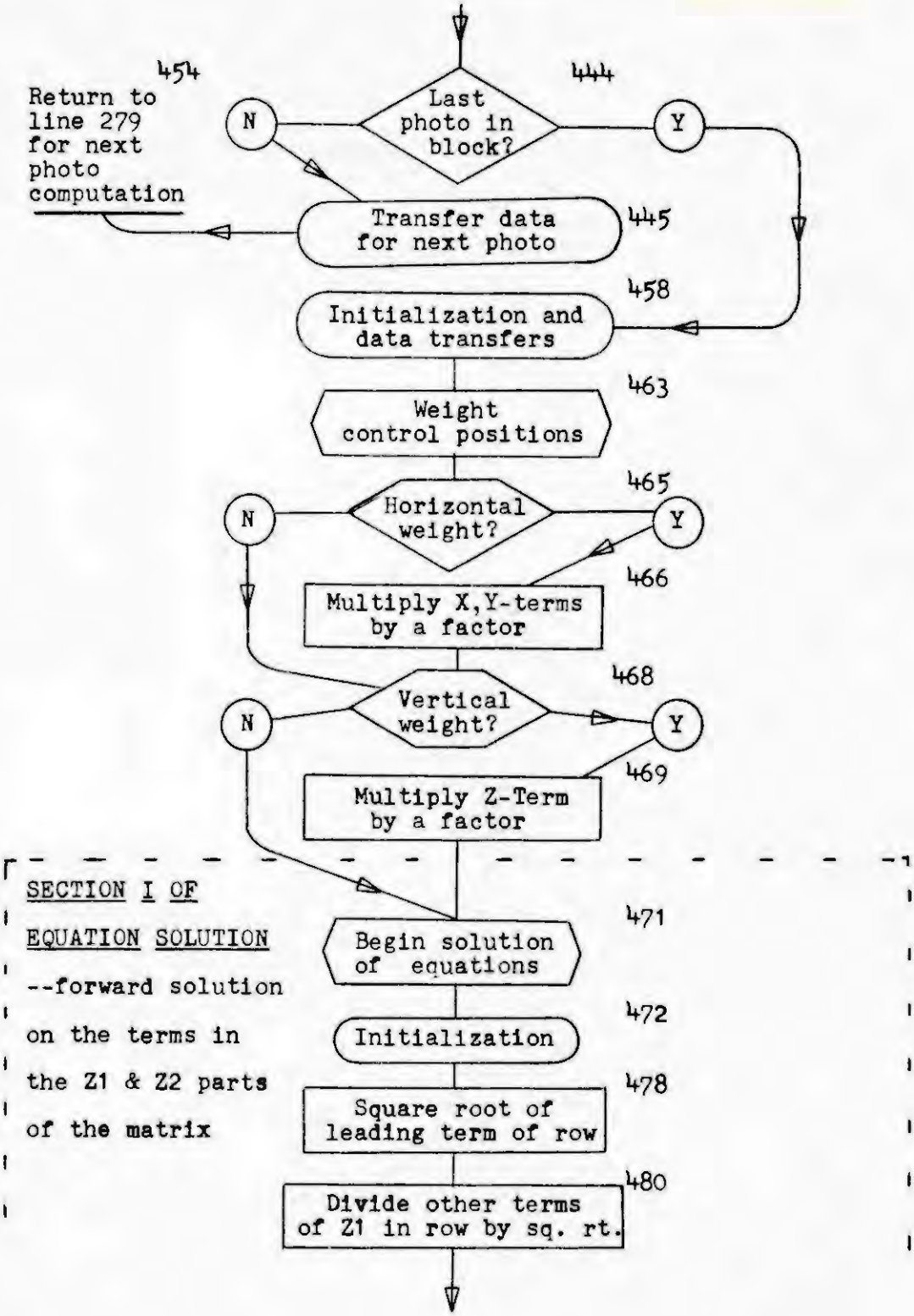
454
Return to line 279 for next photo computation
N
Last photo in block?
444
Y
Transfer data for next photo
445
458
Initialization and data transfers
463
Weight control positions
465
N
Horizontal weight?
Y
466
Multiply X,Y-terms by a factor
468
N
Vertical weight?
Y
469
Multiply Z-Term by a factor
SECTION I OF
EQUATION SOLUTION
--forward solution
on the terms in
the Z1 & Z2 parts
of the matrix
471
Begin solution of equations
472
Initialization
478
Square root of leading term of row
480
Divide other terms of Z1 in row by sq. rt.

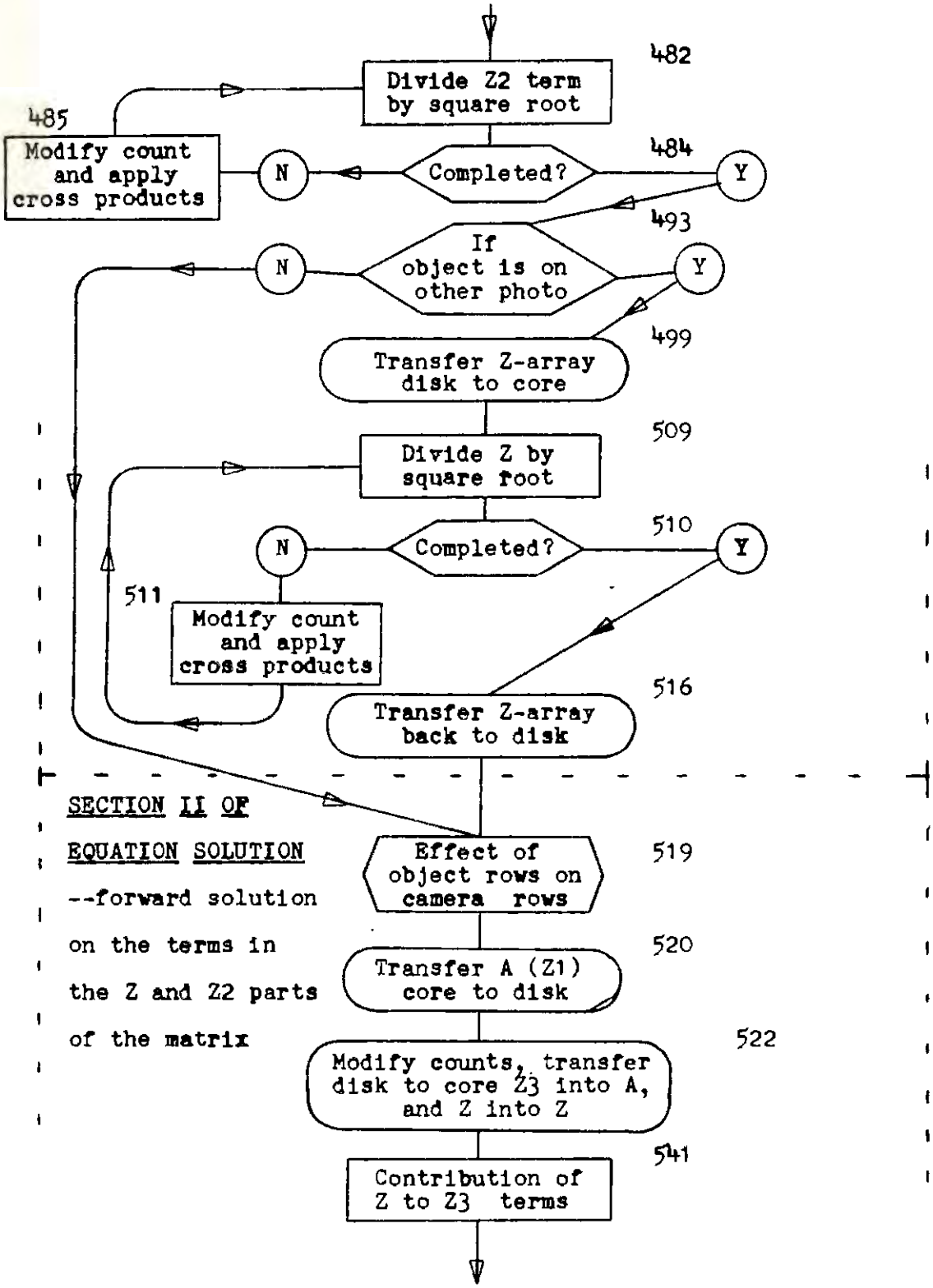
482
Divide Z2 term by square root
485
Modify count and apply cross products
N
Completed?
484
Y
493
If object is on other photo
N
Y
499
Transfer Z-array disk to core
509
Divide Z by square root
510
N
Completed?
Y
511
Modify count and apply cross products
516
Transfer Z-array back to disk
SECTION II OF
EQUATION SOLUTION
--forward solution
on the terms in
the Z and Z2 parts
of the matrix
Effect of object rows on camera rows
519
520
Transfer A (Z1) core to disk
522
Modify counts, transfer disk to core Z3 into A, and Z into Z
541
Contribution of Z to Z3 terms

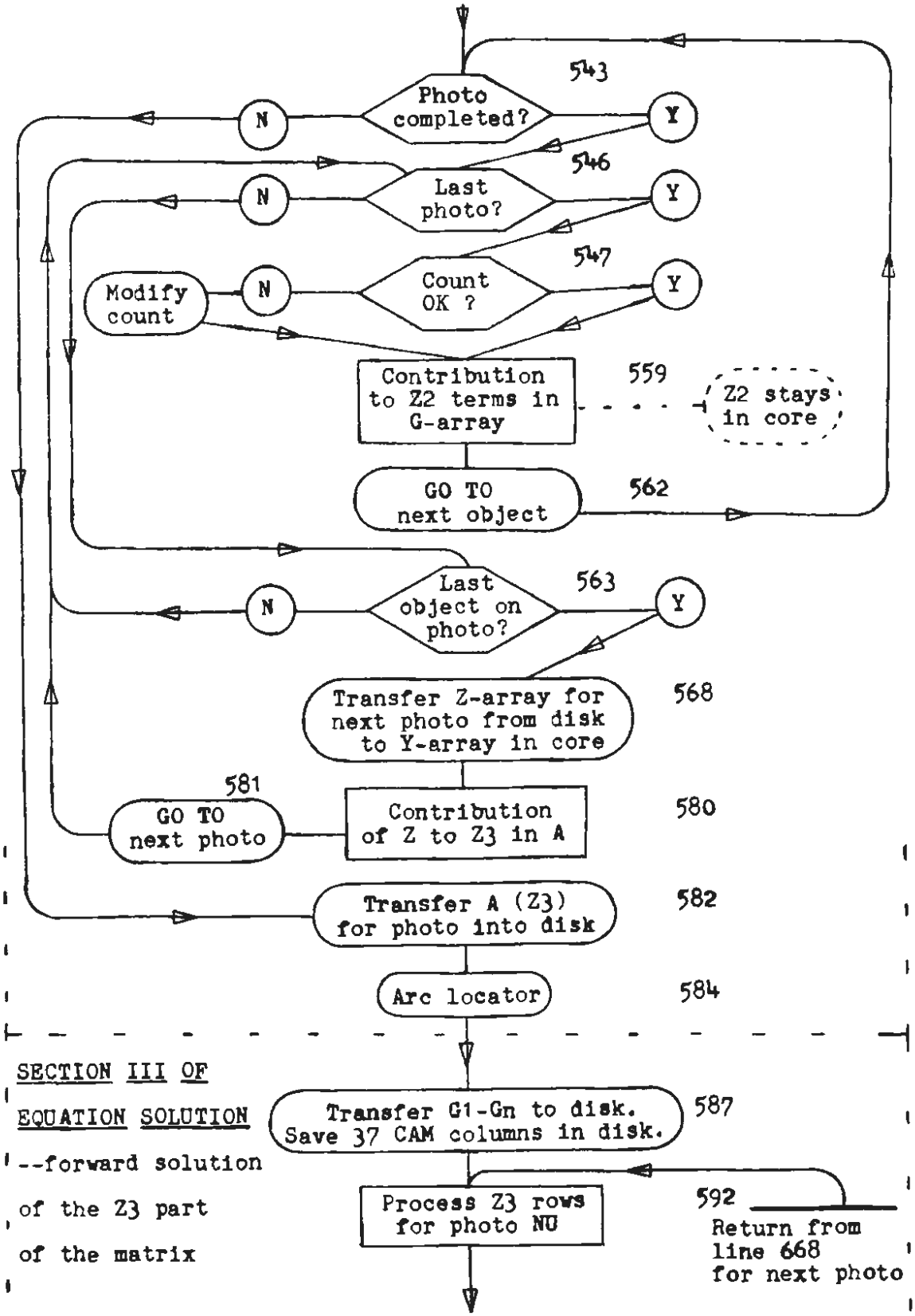
543
Photo completed?
N
Y
546
Last photo?
N
Y
547
Count OK ?
Modify count
N
Y
Contribution to Z2 terms in G-array
559
Z2 stays in core
GO TO next object
562
Last object on photo?
563
N
Y
Transfer Z-array for next photo from disk to Y-array in core
568
581
GO TO next photo
Contribution of Z to Z3 in A
580
Transfer A (Z3) for photo into disk
582
Arc locator
584
SECTION III OF
EQUATION SOLUTION
--forward solution
of the Z3 part
of the matrix
Transfer G1-Gn to disk. Save 37 CAM columns in disk.
587
Process Z3 rows for photo NU
592
Return from line 668 for next photo

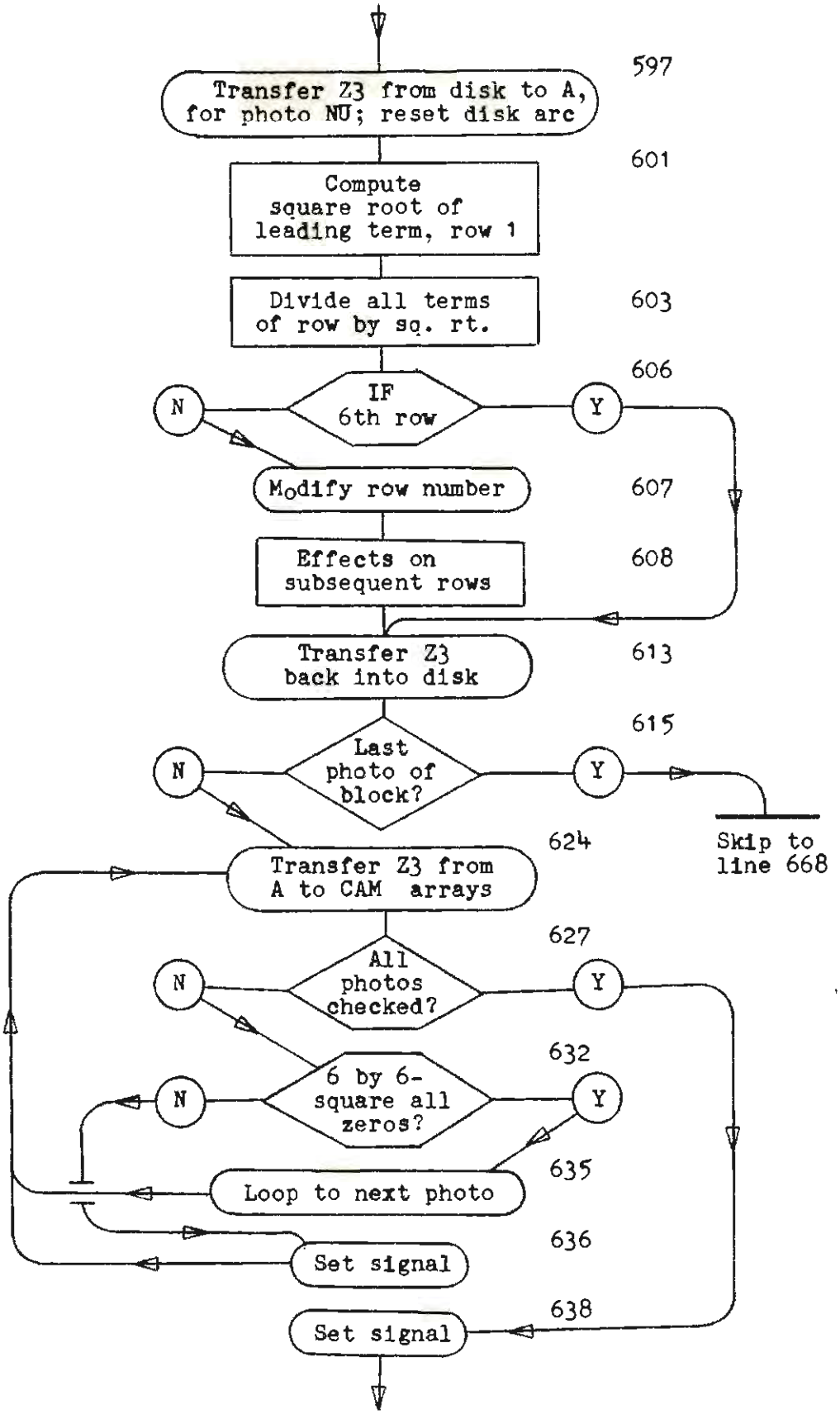
Transfer Z3 from disk to A, for photo NU; reset disk arc
597
Compute square root of leading term, row 1
601
Divide all terms of row by sq. rt.
603
IF 6th row
606
N
Y
Modify row number
607
Effects on subsequent rows
608
Transfer Z3 back into disk
613
Last photo of block?
615
N
Y
Skip to line 668
Transfer Z3 from A to CAM arrays
624
All photos checked?
627
N
Y
6 by 6-square all zeros?
632
N
Y
Loop to next photo
635
Set signal
636
Set signal
638

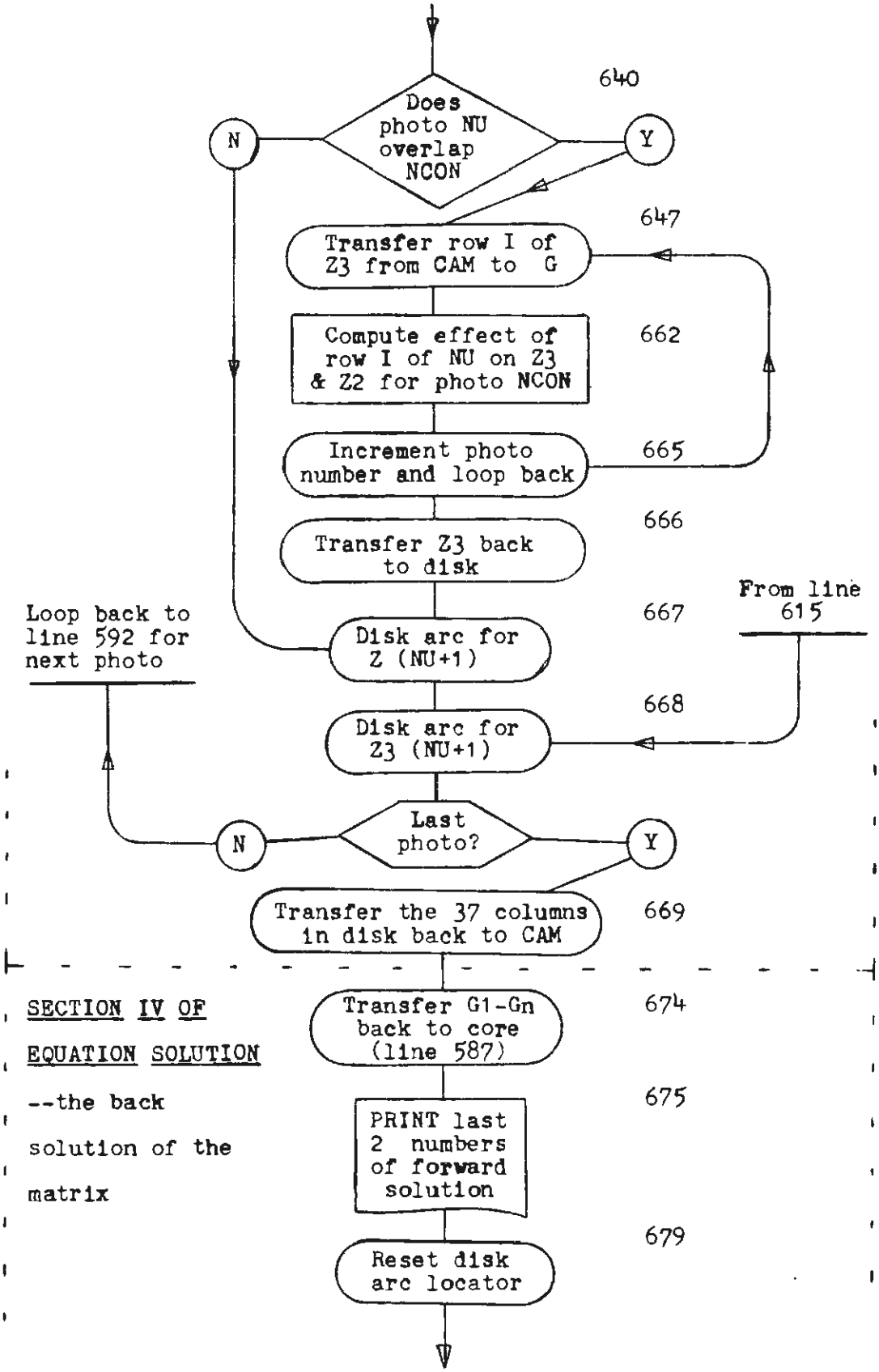
640
Does photo NU overlap NCON
N
Y
647
Transfer row I of Z3 from CAM to G
662
Compute effect of row I of NU on Z3 & Z2 for photo NCON
665
Increment photo number and loop back
666
Transfer Z3 back to disk
667
Disk arc for Z (NU+1)
From line 615
Loop back to line 592 for next photo
668
Disk arc for Z3 (NU+1)
Last photo?
N
Y
669
Transfer the 37 columns in disk back to CAM
SECTION IV OF EQUATION SOLUTION
--the back solution of the matrix
674
Transfer G1-Gn back to core (line 587)
675
PRINT last 2 numbers of forward solution
679
Reset disk arc locator

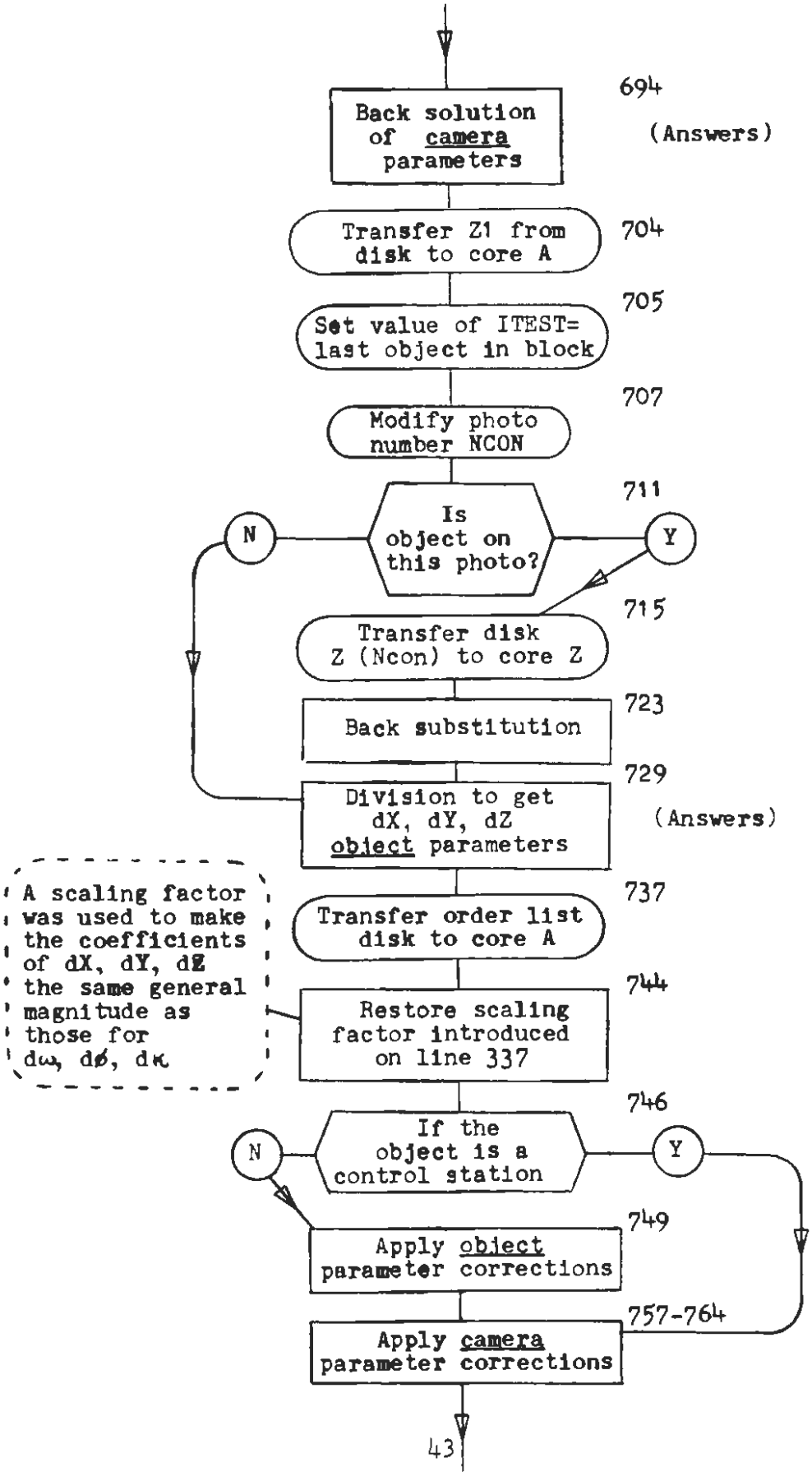
694
Back solution of camera parameters
(Answers)
704
Transfer Z1 from disk to core A
705
Set value of ITEST= last object in block
707
Modify photo number NCON
711
Is object on this photo?
N
Y
715
Transfer disk Z (Ncon) to core Z
723
Back substitution
729
Division to get dX, dY, dZ object parameters
(Answers)
A scaling factor was used to make the coefficients of dX, dY, dZ the same general magnitude as those for dω, dφ, dκ
737
Transfer order list disk to core A
744
Restore scaling factor introduced on line 337
746
If the object is a control station
N
Y
749
Apply object parameter corrections
757-764
Apply camera parameter corrections
43

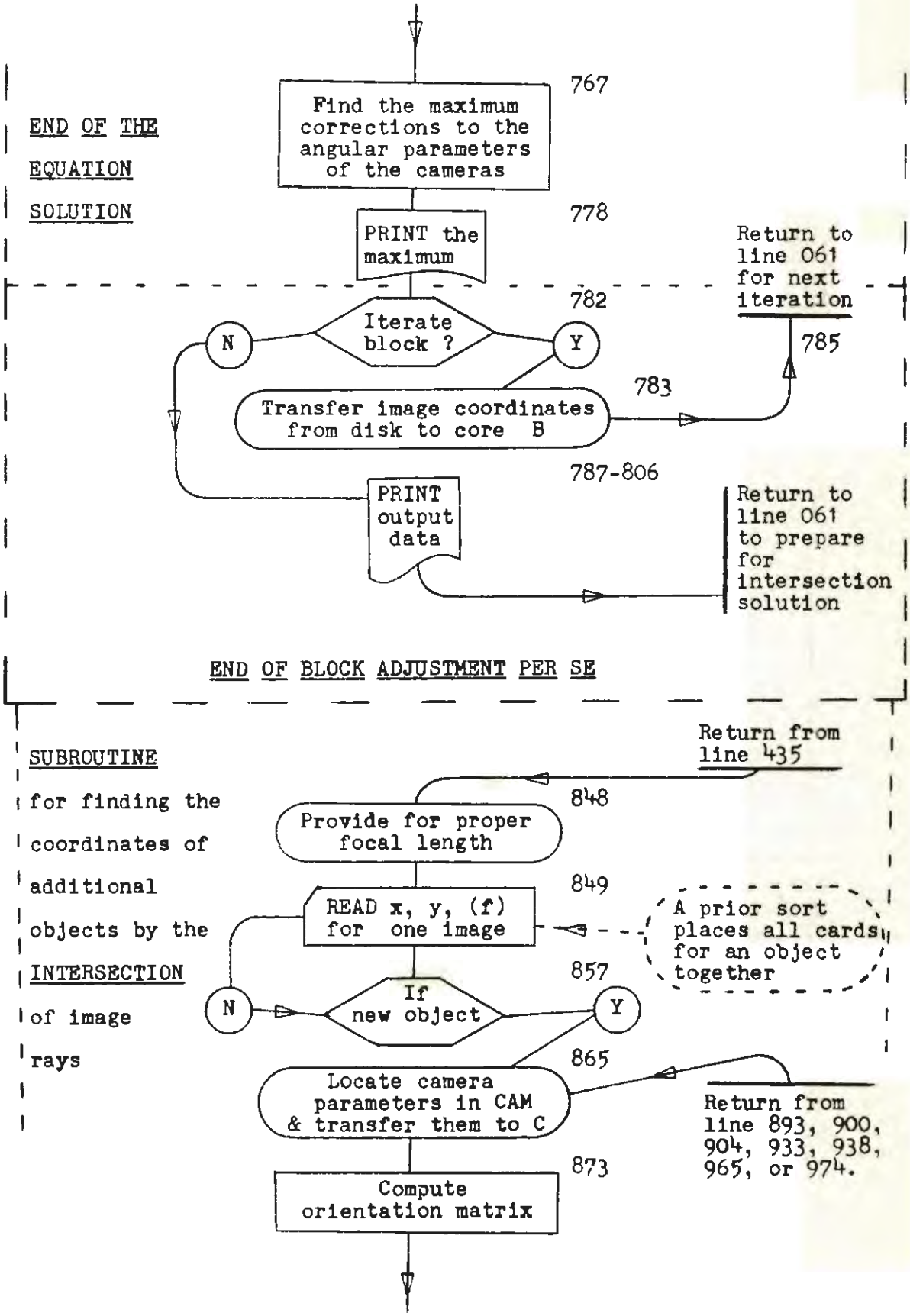
END OF THE EQUATION SOLUTION
Find the maximum corrections to the angular parameters of the cameras
767
PRINT the maximum
778
Return to line 061 for next iteration
782
Iterate block ?
N
Y
785
783
Transfer image coordinates from disk to core B
787-806
PRINT output data
Return to line 061 to prepare for intersection solution
END OF BLOCK ADJUSTMENT PER SE
SUBROUTINE for finding the coordinates of additional objects by the INTERSECTION of image rays
Return from line 435
848
Provide for proper focal length
849
READ x, y, (f) for one image
A prior sort places all cards for an object together
857
If new object
N
Y
865
Locate camera parameters in CAM & transfer them to C
Return from line 893, 900, 904, 933, 938, 965, or 974.
873
Compute orientation matrix

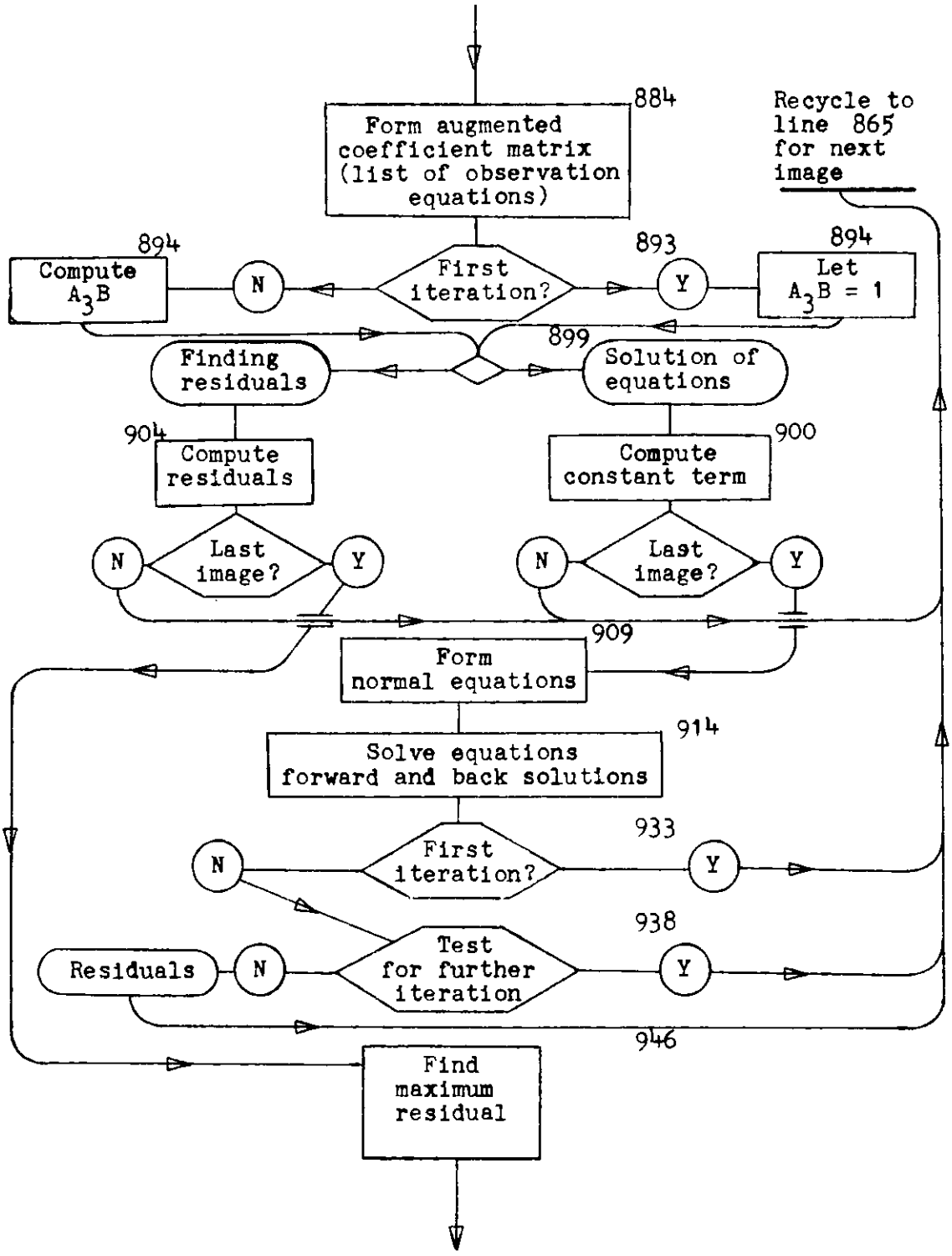
Form augmented coefficient matrix (list of observation equations)
884
Recycle to line 865 for next image
894
Compute A_3B
N
First iteration?
893
Y
894
Let $A_3B = 1$
899
Finding residuals
Solution of equations
904
Compute residuals
900
Compute constant term
N
Last image?
Y
N
Last image?
Y
909
Form normal equations
914
Solve equations forward and back solutions
933
N
First iteration?
Y
938
Residuals
N
Test for further iteration
Y
946
Find maximum residual

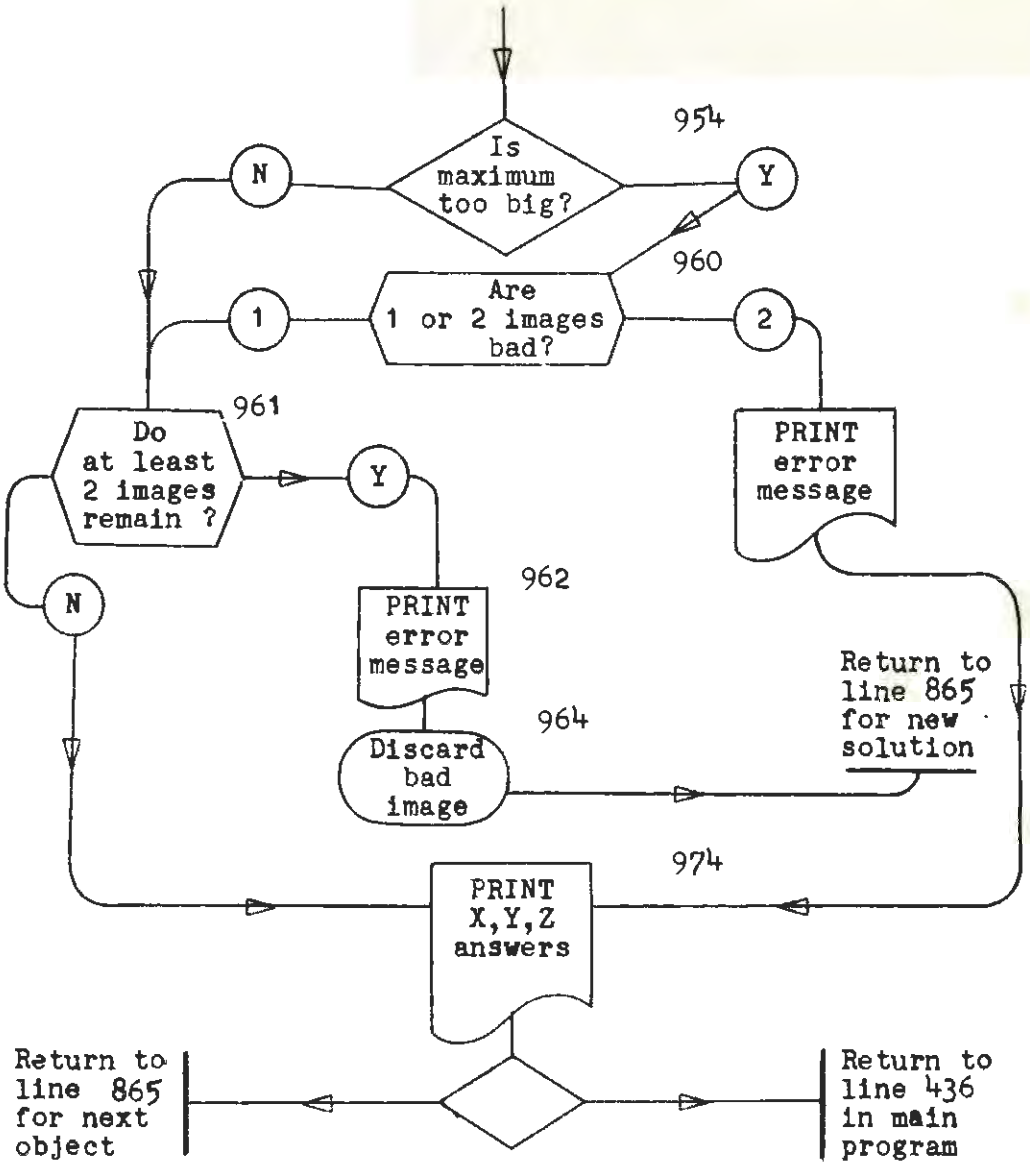
954
Is maximum too big?
N
Y
960
Are 1 or 2 images bad?
1
2
961
Do at least 2 images remain ?
Y
N
PRINT error message
962
PRINT error message
964
Discard bad image
Return to line 865 for new solution
974
PRINT X,Y,Z answers
Return to line 865 for next object
Return to line 436 in main program

END

Appendix 2. Fortran Source Program

```
B         JOB,K34-4587 200 PHOTO BLOCK ADJUSTMENT  KELLER
*         *****     *****     *****     *****     *****     *****     ***
*         OPERATOR - THE RUNNING TIME SHOULD BE ABOUT    MINUTES        *
*         THIS PROGRAM IS TO BE CHARGED TO PROJECT NO 221104100         *
*         *****     *****     *****     *****     *****     *****     ***
B         TYPE,COMPILGO,FORTRAN,PM
T         SUBTYPE,FIOD,LMAP,PUNCH
BA        IOD,DISK
          END
T         SUBTYPE,FORTRAN,LMAP,LSTRAP,PUNCH
C       BLOCK ADJUSTMENT USING DISK STORAGE-200 PHOTO LIMIT    KELLER
        DIMENSION B(51,3),E(49,6),C(20,3),P(13,10),A(6,1500),D(6,7),
       1CAM(200,60),Z(147,6),G(10236),Y(147,6)
        COMMON CAM,C,D
  776   ITERAT=1
        IGO=1
        ICUT=1
        IRE=1
        LINE=0
        JA=2
        READ 531
        PRINT 531
        PRINT 532
        IPHO=0
C       P H O T O   R E S E C T I O N   P H A S E
  755   DO 638 K=1,49
  638   E(K,1)=0.
        DO 639 K=1,1500
  639   A(1,K)=0.
C         READ BLOCK CONSTANTS
        READ 524,LARRY,FL,WT712,WT12P,WTCON,MAX,RESID
C         READ IN ALL GROUND COORDINATES FOR BLOCK
        J=1
  605   NCON=J+5
        READ 527,(G(I),I=J,NCON),ITEST
        IF(ITEST)603,603,670
  603   J=J+6
        GO TO 605
  670   NCON=NCON/6
        IF(NCON-1706)604,604,801
  801   PRINT 529,NCON
        STOP
C         READ IN REFINED IMAGE COORDINATES FOR PLATE BEING RESECTED
  604   GO TO (604,803),JA
  803   READ 525,B(50,1),B(50,2),B(50,3),B(51,1),B(51,2)
        IF(LARRY)804,804,805
  805   FL=B(51,2)
  804   IMAGE=1
  602   READ 526,(B(IMAGE,J),J=1,3),ITEST
        IF(ITEST)600,600,601
  600   IMAGE =IMAGE+1
        GO TO 602
  601   B(51,3)=IMAGE
```

```
      IF(IMAGE-49)880,880,611
  611 PRINT 545,B(50,1),IMAGE
      STOP
C     STORE IN DISK THE REFINED IMAGE COORDINATES OF THIS PLATE FOR USE
C     IN RESECTION AND BLOCK ADJUSTMENT
  880 CALL W(1,JA,B,153)
C       EXTRACT GROUND COORDINATES FOR PLATE AND PLACE IN E ARRAY
  764 LAST=0
      NU=0
      IF(B(50,2))630,630,631
  631 NROW=7
      NU=6
      GO TO 637
  630 IF(B(50,3))634,634,633
  633 NROW=1
      NMI=12
      LAST=1
      GO TO 632
  634 NROW=1
  637 NMI=B(51,3)
  632 DO 792 K=NROW,NMI
      J=B(K,1)/1000000.
      FK=J*1000000
      FK=B(K,1)-FK
      IF(ITERAT-1)790,790,780
  790 GO TO (781,780),IOUT
  780 DO 782 M=1,LINE
      IF(FK-A(1,M))782,783,782
  782 CONTINUE
  783 NU=NU+1
      DO 784 J=1,4
  784 E(NU,J)=A(J,M)
      GO TO 792
  781 DO 607 M=1,NCON
      I=6*M-5
      IF(FK-G(1))607,629,607
  607 CONTINUE
       PRINT 528,FK
      STOP
  629 NU=NU+1
      DO 606 J=1,6
      E(NU,J)=G(I)
  606 I=I+1
  792 CONTINUE
      IF(LAST)635,635,636
  636 IF(IMAGE-18)635,635,649
  649 NROW=19
      NU=18
      LAST=0
      GO TO 637
C       EXPEDITE OBJECT ORDER LIST IN A ARRAY BY STORING E ARRAY IN DISK
  635 CALL W(1,JA,E,294)
      IF(ITERAT-1)761,761,762
  761 GO TO (785,762),IOUT
```

```
  762 IF(B(51,1))673,673,675
  675 GC TO (757,758),IOUT
C       ESTABLISH ORDER LIST OF OBJECTS IN A ARRAY
  785 DO 640 K=1,IMAGE
      IF(E(K,1))640,64C,641
  641 NU=1
  646 IF(E(K,1)-A(1,NU))642,640,642
  642 IF(A(1,NU))644,643,644
  643 DO 645 J=1,6
  645 A(J,NU)=E(K,J)
      LINE=LINE+1
      GC TO 640
  644 NU=NU+1
      GC TO 646
  640 CCNTINUE
C       INITIAL APPROXIMATIONS CF CAMERA PARAMETERS
      N=0
      DC 608 J=1,2
      C(1,J)=E(11,J+I)
      C(2,J)=0.
  608 C(3,J)=1.
C       ADJUST APPROXIMATE AZIMUTH PARAMETERS FOR SWING AND ZO
      DC 609 I=1,2
      D(1,I)=B(7,I+1)-B(9,I+1)
  609 D(2,I)=E(7,I+1)-E(9,I+1)
      D(2,4)=D(2,1)*D(2,1)+D(2,2)*D(2,2)
      D(1,3)=(D(2,1)*D(1,1)+D(2,2)*D(1,2))/D(2,4)
      D(2,3)=(D(2,2)*D(1,1)-D(2,1)*D(1,2))/D(2,4)
      SCALE=SQRT(D(1,3)*D(1,3)+D(2,3)*D(2,3))
      C(2,3)=D(2,3)/SCALE
      C(1,3)=FL/SCALE
      C(3,3)=D(1,3)/SCALE
C       ORIENTATION FACTORS IN C ARRAY
  610 N=N+1
      IF(N-5)652,652,695
  695 PRINT 535,B(50,1)
      PRINT 540,(B(50,1),(C(I,J),J=1,3),I=1,2)
      IRE=2
      GC TO 893
  652 C(4,1)=C(3,2)*C(3,3)
      C(5,1)=-C(3,2)*C(2,3)
      C(6,1)=C(2,2)
      C(10,1)=-C(2,2)*C(3,3)
      C(11,1)=C(2,2)*C(2,3)
      C(12,1)=C(3,2)
      C(10,2)=C(4,1)*C(2,1)
      C(11,2)=C(5,1)*C(2,1)
      C(12,2)=C(2,1)*C(2,2)
      C(10,3)=-C(4,1)*C(3,1)
      C(11,3)=-C(5,1)*C(3,1)
      C(12,3)=-C(3,1)*C(2,2)
      C(4,2)=C(3,1)*C(2,3) + C(12,2)*C(3,3)
      C(5,2)=C(3,1)*C(3,3) - C(12,2)*C(2,3)
      C(6,2)=-C(2,1)*C(3,2)
```

```
      C(4,3)=C(2,1)*C(2,3) + C(10,1)*C(3,1)
      C(5,3)=C(2,1)*C(3,3) + C(11,1)*C(3,1)
      C(6,3)=C(3,1)*C(3,2)
      DO 612 I=7,9
      C(I,1)=0.
      C(I,2)=-C(I-3,3)
      C(I,3)=C(I-3,2)
      C(13,I-6)=C(5,I-6)
      C(14,I-6)=-C(4,I-6)
  612 C(15,I-6)=0.
      GO TO(613,809),IGO
C       CLEAR NORMAL EQUATION D ARRAY TO ZERO
  613 DO 614 I=1,6
      DO 614 J=I,7
  614 D(I,J)=0.
C       COMPUTE P TERMS FOR PASS POINTS USED FOR RESECTION
      IF(B(50,2))796,796,615
  615 M=7
      NROW=15
      GO TO 617
  796 IF(B(50,3))797,797,616
  616 M=1
      NROW=9
      GO TO 617
  797 M=1
      NROW=17
  617 DO 618 NU=M,NROW,2
      DO 619 K=1,3
  619 C(16,K)=E(NU,K+1)-C(1,K)
      K=4
      DO 620 L=17,20
      DO 620 I=1,3
      C(L,I)=C(K,1)*C(16,1) + C(K,2)*C(16,2) + C(K,3)*C(16,3)
  620 K=K+1
      DO 621 I=1,2
      DO 622 L=1,4
  622 P(I,L)=(B(NU,I+1)*C(L+16,3)-(-FL)*C(L+16,I))/C(17,3)
      DO 623 L=5,7
  623 P(I,L)=(-B(NU,I+1)*C(6,L-4)+(-FL)*C(I+3,L-4))*C(1,3)/C(17,3)
  621 P(I,8)=-P(I,1)
C       CONTRIBUTION TO NORMAL EQUATIONS
      DO 618 I=1,6
      DO 618 J=I,7
      DO 618 K=1,2
  618 D(I,J)=D(I,J)+P(K,I+1)*P(K,J+1)
C       FORWARD SOLUTION
  624 DO 699 I=1,6
      SQR=SQRT(D(1,I))
      DO 698 J=I,7
  698 D(1,J)=D(I,J)/SQR
      IF(I-6)697,696,696
  697 IP1=I+1
      DO 699 L=IP1,6
      DO 699 J=L,7
```

```
  699 D(L,J)=D(L,J)-D(I,L)*D(I,J)
C     BACK SOLUTION
  696 D(6,7)=D(6,7)/D(6,6)
      DO 691 I=1,5
      NMI=6-I
      NMIP1=NMI+1
      DO 690 J=NMIP1,6
  690 D(NMI,7)=D(NMI,7)-D(J,7)*D(NMI,J)
  691 D(NMI,7)=D(NMI,7)/D(NMI,NMI)
      DO 625 I=4,6
  625 D(I,7)=D(I,7)*C(1,3)
C       ADD LEAST SQUARES RESULTS TO CAMERA PARAMETERS IN C ARRAY
      DO 626 J=1,3
      C(1,J)=C(1,J)+D(J+3,7)
      C(4,J)=D(J,7)
      C(5,J)=SQRT(1.-C(4,J)*C(4,J))
      C(6,J)=C(2,J)*C(5,J)+C(3,J)*C(4,J)
C       TEST MAGNITUDE OF CORRECTIONS FOR ORIENTATION PARAMETERS
  627 DO 628 I=1,3
      IF(ABS(D(I,7))-.00001)628,628,610
  628 CONTINUE
C       STORE CAMERA PARAMETERS AS COMPUTED FROM PHOTO RESECTION
  893 IPHO=IPHO+1
      CAM(IPHO,1)=B(50,1)
      DO 647 J=1,3
      CAM(IPHO,J+57)=C(3,J)
      CAM(IPHO,J+1)=C(2,J)
  647 CAM(IPHO,J+4)=C(1,J)
      IF(B(51,1))604,604,765
  765 IF(IRE-2)763,894,894
  894 STOP
C       STORE A ARRAY IN DISK AND PRINT THE NUMBER OF OBJECT POSITIONS
C       TO BE COMPUTED IN THE BLOCK
  763 IF(LINE-1500)810,810,811
  811 PRINT 544,LINE
      STOP
  810 ITOTAL=IPHO
      PRINT 543,ITOTAL,LINE
      NA=6*LINE
  757 JA=1
      CALL LOC(1,JLOC,400)
      CALL W(1,JA,A,NA)
C     B L O C K   A D J U S T M E N T   P H A S E
      IGO = 2
      DO 819 I=1,5700
  819 G(I)=0.
      IF(ITERAT-1)730,730,760
  730 DO 766 J=1,LINE
      G(3*J+5698)=A(1,J)
      G(3*J+5699)=A(5,J)
  766 G(3*J+5700)=A(6,J)
  760 KZ=418
      KZ3=818
  814 GO TO (814,815),JA
```

```
  815 DO 816 J=1,LINE
      DO 816 I=1,6
  816 A(I,J)=0.
  758 IPHO=0
      KBE=0
C       RESET REFINED IMAGE AND GROUND COORDINATES IN B AND E ARRAYS
  756 JA=1
      CALL LOC(1,JLOC,KBE)
      CALL RD(1,JA,B,153,E,294)
      GO TO (759,768),IOUT
  759 MARK=0
      ITEST=1
      DO 802 I=10201,10236
  802 G(I)=0.
C       RESET CAMERA PARAMETERS IN C ARRAY
  768 IPHO=IPHO+1
      DO 812 J=1,3
      C(1,J)=CAM(IPHO,J+4)
      C(2,J)=CAM(IPHO,J+1)
  812 C(3,J)=CAM(IPHO,J+57)
      GO TO 652
  809 GO TO (809,813),JA
  813 LAST=0
      IF(LARRY)767,767,807
  807 FL=B(51,2)
C       COMPUTE C ARRAY ROWS 16 THROUGH 20 FOR EACH IMAGE
  767 IF(B(50,2))650,650,648
  648 NMI=7
      GO TO 651
  650 IF(B(50,3))653,653,654
  654 NMI=1
      NROW=12
      LAST=1
      GO TO 655
  653 NMI=1
  651 NROW=B(51,3)
  655 DO 656 NU=NMI,NROW
      GO TO (866,867),IOUT
  867 DO 868 J=1,LINE
      IF(E(NU,1)-A(1,J))868,869,868
  868 CONTINUE
  869 JULY=3*J
      IF(A(5,J))870,870,871
  871 E(NU,2)=E(NU,2)+G(JULY-2)
      E(NU,3)=E(NU,3)+G(JULY-1)
  870 IF(A(6,J))866,866,872
  872 E(NU,4)=E(NU,4)+G(JULY)
  866 DO 657 K=1,3
  657 C(16,K)=E(NU,K+1)-C(1,K)
      GO TO (873,874),IOUT
  874 J=17
      GO TO 875
  873 J=20
  875 K=4
```

```
      DO 658 L=17,J
      DO 658 I=1,3
      C(L,I)=C(K,1)*C(16,1) + C(K,2)*C(16,2) + C(K,3)*C(16,3)
  658 K=K+1
      GO TO (769,770),IOUT
C       COMPUTE P COEFFICIENTS OF OBSERVATION EQUATIONS FOR EACH IMAGE
  769 DO 659 I=1,2
      DO 660 L=1,4
  660 P(I,L)=(B(NU,I+1)*C(L+16,3)-(-FL)*C(L+16,I))/C(17,3)
      DO 659 L=5,7
  659 P(I,L)=(-B(NU,I+1)*C(6,L-4)+(-FL)*C(I+3,L-4))*CAM(1,7)/C(17,3)
C       ARRANGE AUGMENTED COEFFICIENT MATRIX
      DO 661 I=3,4
      DO 662 N=1,3
  662 P(I,N)=-P(I-2,N+4)
      DO 663 N=4,9
  663 P(I,N)=P(I-2,N-2)
  661 P(I,10)=-P(I-2,1)
C       WEIGHTING THE CONTROL STATION OBSERVATION EQUATIONS
      DO 860 J=1,LINE
      IF(E(NU,1)-G(3*J+5698))860,864,860
  860 CONTINUE
  864 IF(G(3*J+5699))862,861,862
  861 IF(G(3*J+5700))862,865,862
  862 DO 863 I=3,4
      DO 863 J=1,10
  863 P(1,J)=P(I,J)*WTCON
  865 CONTINUE
C       WEIGHTING EQUATIONS FOR LOCATION OF IMAGE ON PLATE (RESOLUTION)
      RADIUS=SQRT(B(NU,2)**2 + B(NU,3)**2)
      IF(RADIUS-.07)727,727,779
  779 IF(RADIUS-.12)786,786,787
  786 WEIGHT=WT712
      GO TO 788
  787 WEIGHT=WT12P
  788 DO 789 I=3,4
      DO 789 J=1,10
  789 P(I,J)=P(I,J)*WEIGHT
C       CONTRIBUTION TO COMPRESSED NORMAL EQUATIONS
  727 DO 664 I=5,13
      DO 664 J=1,10
  664 P(I,J)=0.
      DO 665 I=1,9
      DO 665 IP1=3,4
      DO 665 M=I,10
  665 P(I+4,M)=P(I+4,M)+P(IP1,I)*P(IP1,M)
      DO 666 J=1,LINE
      IF(E(NU,1)-G(3*J+5698))666,667,666
  666 CONTINUE
  667 DO 668 I=1,3
  668 A(I,J)=A(I,J)+P(5,I)
      A(4,J)=A(4,J)+P(6,2)
      A(5,J)=A(5,J)+P(6,3)
      A(6,J)=A(6,J)+P(7,3)
```

```
      G(3*J-2)=G(3*J-2)+P(5,10)
      G(3*J-1)=G(3*J-1)+P(6,10)
      G(3*J)=G(3*J)+P(7,10)
      DO 672 I=5,7
      MARK=MARK+1
      L=4
      DO 672 K=1,6
      Z(MARK,K)=P(I,L)
  672 L=L+1
      I=8
      L=4
      DO 674 N=10201,10236
      G(N)=G(N)+P(I,L)
      I=I+1
      IF(I-13)674,674,817
  817 L=L+1
      I=8
  674 CONTINUE
      NMIP1=4500+6*IPHO-5
      DO 676 I=8,13
      G(NMIP1)=G(NMIP1)+P(I,10)
  676 NMIP1=NMIP1+1
      CAM(IPHO,ITEST+7)=E(NU,1)
      ITEST=ITEST+1
      GO TO 656
C       BLOCK FINALIZED--COMPUTE X,Y PLATE RESIDUALS
  770 DO 771 I=1,2
  771 P(I,1)=(B(NU,I+1)*C(17,3)-(-FL)*C(17,I))/C(17,3)
      PRINT 540,B(NU,1),P(1,1),P(2,1)
      P(1,10)=P(1,10)+P(1,1)*P(1,1)
      P(2,10)=P(2,10)+P(2,1)*P(2,1)
      SCALE = SCALE+2.
  656 CONTINUE
      GO TO (693,694),IOUT
C       BLOCK FINALIZED--RECYCLE FOR OTHER PLATES IN THE BLOCK
  694 IF(LAST)773,773,772
  772 IF(B(51,3)-18.)773,773,774
  773 IF(B(51,1))777,777,775
  777 KBE=KBE+2
      GO TO 756
  774 NMI=19
      LAST=-1
      GO TO 651
C       BLOCK FINALIZED--PRINT OUT RMS RESIDUAL AND CAMERA PARAMETERS
C       FOR ENTIRE BLOCK
  775 P(1,10)=SQRT((P(1,10)+P(2,10))/SCALE)
      PRINT 538,P(1,10)
      PRINT 539
      DO 800 I=1,IPHO
      PRINT 540,(CAM(I,J),J=1,4)
  800 PRINT 540,CAM(I,1),(CAM(I,J),J=58,60)
      PRINT 541
      PRINT 540,(CAM(I,1),(CAM(I,J),J=5,7),I=1,IPHO)
C     O B J E C T   I N T E R S E C T I O N   P H A S E
```

```
      CALL INSECT(ITOTAL,FL,LARRY,RESID)
      PRINT 542
C     B L O C K  A D J U S T M E N T  C O M P L E T E D
C     I N I T I A L I Z E  F O R  N E X T  B L O C K  P R O B L E M
      GO TO 776
C       RECYCLE FOR OTHER PLATES AND IMAGES THAT CONTRIBUTE EQUATIONS
C       TO THE LEAST SQUARES BLOCK ADJUSTMENT
  693 IF(LAST)680,680,678
  678 IF(B(51,3)-1E.)680,680,679
  680 IF(B(51,1))692,692,677
  692 CAM(IPHO,57)=ITEST-1
      KBE=KBE+2
      CALL LOC(1,JLOC,KZ)
      CALL W(1,JA,Z,882)
      CALL LOC(1,JLOC,KZ3)
      CALL W(1,JA,G(10201),36)
      KZ=KZ+2
      MORT=ITOTAL+1-IPHO
      KZ3=KZ3+(36*MORT+511)/512
      GO TO 756
  679 NMI=19
      LAST=-1
      GO TO 651
  677 CAM(IPHO,57)=ITEST-1
      CALL LOC(1,JLOC,KZ)
      CALL W(1,JA,Z,882)
      CALL LOC(1,JLOC,KZ3)
      CALL W(1,JA,G(10201),36)
C       WEIGHTING THE POSITIONS OF THE CONTROL STATIONS
      DO 791 J=1,LINE
      IF(G(3*J+5699))846,846,847
  847 A(1,J)=A(1,J)*G(3*J+5699)
      A(4,J)=A(4,J)*G(3*J+5699)
  846 IF(G(3*J+5700))791,791,848
  848 A(6,J)=A(6,J)*G(3*J+5700)
  791 CONTINUE
C     FORWARD SOLUTION OF NORMAL EQUATIONS FOR BLOCK
      DO 681 M=1,LINE
      C(7,J)=C(3,J)*C(5,J)-C(2,J)*C(4,J)
      C(2,J)=C(6,J)
  626 C(3,J)=C(7,J)
      NU=3*M
      LAST=3
      NROW=0
      DO 682 I=1,3
      L=LAST
      NROW=NROW+1
      SQR=SQRT(A(NROW,M))
      DO 683 J=NROW,LAST
  683 A(J,M)=A(J,M)/SQR
      N=3*(M-1)+1
      G(N)=G(N)/SQR
      IF(I-3)684,685,684
  684 K=N+I
```

```
      DO 671 ME=K,NU
      NROW=NROW+1
      DO 702 J=NROW,L
      LAST=LAST+1
  702 A(LAST,M)=A(LAST,M)-A(NROW,M)*A(J,M)
  671 G(ME)=G(ME)-A(NROW,M)*G(N)
  682 LAST=4+I
  685 DO 681 NU=1,IPHO
      N=7. + CAM(NU,57)
      DO 687 ITEST=8,N
      IF(G(3*M+5698)-CAM(NU,ITEST))687,688,687
  687 CONTINUE
      GO TO 681
  688 KZ=416+2*NU
      CALL LOC(1,JLOC,KZ)
      CALL RD(-1,JA,Z,882)
      MARK=(ITEST-8)*3
      MORT=MARK+3
      NROW=0
      DO 689 I=1,3
      NROW=NROW+1
      MARK=MARK+1
      DO 700 J=1,6
  700 Z(MARK,J)=Z(MARK,J)/A(NROW,M)
      IF(I-3)701,686,701
  701 K=MARK+1
      DO 689 L=K,MORT
      NROW=NROW+1
      DO 689 J=1,6
  689 Z(L,J)=Z(L,J)-A(NROW,M)*Z(MARK,J)
  686 CALL LOC(1,JLOC,KZ)
      CALL W(1,JA,Z,882)
  681 CONTINUE
C       EFFECT OF OBJECT ROWS ON CAMERA ROWS
      CALL LOC(1,JLOC,2331)
      CALL W(1,JA,A,NA)
      KZ3=818
      DO 704 NU=1,IPHO
      MORT=ITOTAL+1-NU
      M=6*MORT
      NA=6*M
      KZ=416+2*NU
      NMI=7.+CAM(NU,57)
      LAST=3.*CAM(NU,57)
      NCON=NU
      CALL LOC(1,JLOC,KZ3)
  823 DO 824 I=1,6
      CALL LOC(1,JLOC,KZ)
      CALL RD(-1,JA,Z,882)
      DO 705 L=1,6
      DO 705 I=1,LAST
      DO 705 J=L,6
  705 A(L,J)=A(L,J)-Z(I,L)*Z(I,J)
      ITEST=8
```

```
712 IF(ITEST-NMI)798,798,713
798 LAST=3*(ITEST-7)
    MARK=LAST-2
710 NCON=NCON+1
    IF(NCON-IPHO)711,711,709
709 DO 714 J=1,LINE
    IF(G(3*J+5698)-CAM(NU,ITEST))714,715,714
714 CONTINUE
715 JOYCE=0
    N=4500+6*NU
    K=N-5
    DO 716 L=K,N
    JOYCE=JOYCE+1
    NROW=3*J-3
    DO 716 I=MARK,LAST
    NROW=NROW+1
716 G(L)=G(L)-Z(I,JOYCE)*G(NROW)
    ITEST=ITEST+1
    NCON=NU
    GO TO 712
711 N=7.+CAM(NCON,57)
    DO 707 IMAGE=8,N
    IF(CAM(NCON,IMAGE)-CAM(NU,ITEST))707,706,707
707 CONTINUE
    GO TO 710
706 KZ=416+2*NCON
    CALL LOC(1,JLOC,KZ)
    CALL RD(-1,JA,Y,882)
    JULY=6*(NCON-NU+1)
    JUNE=JULY-5
    DO 708 L=1,6
    NEIL=3*(IMAGE-8)
    DO 708 I=MARK,LAST
    NEIL=NEIL+1
    K=0
    DO 708 J=JUNE,JULY
    K=K+1
708 A(L,J)=A(L,J)-Z(I,L)*Y(NEIL,K)
    GO TO 710
713 CALL LOC(1,JLOC,KZ3)
    CALL W(1,JA,A,NA)
704 KZ3=KZ3+(36*MORT+511)/512
C     FORWARD SOLUTION OF CAMERA ROWS
    N=6*IPHO
    CALL LOC(1,JLOC,2349)
    CALL W(1,JA,G,N)
    CALL LOC(1,JLOC,2352)
    CALL W(1,JA,CAM,7400)
    KZ3=818
    DO 723 NU=1,IPHO
    KZ=KZ3
    NCON=NU
    JULY=6*(ITOTAL+1-NU)
    NA=6*JULY
```

```
      CALL LOC(1,JLOC,KZ3)
      CALL RD(1,JA,A,NA)
      CALL LOC(1,JLOC,KZ3)
      DO 728 I=1,6
      SQR=1./SQRT(A(I,I))
      DO 718 J=I,JULY
  718 A(I,J)=A(I,J)*SQR
      K=4494+6*NU+I
      G(K)=G(K)*SQR
      IF(I-6)720,728,728
  720 IP1=I+1
      DO 717 L=IP1,6
      DO 722 J=L,JULY
  722 A(L,J)=A(L,J)-A(I,L)*A(I,J)
      M=K+L-I
  717 G(M)=G(M)-A(I,L)*G(K)
  728 CONTINUE
      CALL W(1,JA,A,NA)
      IF(NU-IPHO)829,723,729
  829 N=1
      DO 845 I=1,6
      L=0
      DO 719 J=1,JULY
      L=L+1
      IF(L-200)719,719,833
  833 N=N+1
      L=1
  719 CAM(L,N)=A(I,J)
  845 N=N+1
  724 NCON=NCON+1
      IF(NCON-IPHO)831,831,830
  831 N=6*(NCON-NU+1)
      M=N-5
      DO 825 J=M,N
      DO 825 I=1,6
      IF(A(I,J))818,825,818
  825 CONTINUE
      CAM(NCON,37)=0.
      GO TO 724
  818 CAM(NCON,37)=1.
      GO TO 724
  830 CAM(NU,37)=0.
      DO 832 NCON=NU,IPHO
      IF(CAM(NCON,37))835,832,835
  835 CALL LOC(1,JLOC,KZ)
      NA=36*(ITOTAL+1-NCON)
      J=6*(NCON-NU)+1
      CALL RD(1,JA,A(1,J),NA)
      CALL LOC(1,JLOC,KZ)
      N=1
      DO 808 I=1,6
      JUNE=J-1
      K=4494+6*NU+I
      M=4494+6*NCON
```

```
      L=0
      DO 836 NEIL=1,JULY
      L=L+1
      IF(L-200)836,836,837
  837 N=N+1
      L=1
  836 G(NEIL)=CAM(L,N)
      DO 725 L=1,6
      M=M+1
      JUNE=JUNE+1
      DO 726 IP1=JUNE,JULY
  726 A(L,IP1)=A(L,IP1)-G(JUNE)*G(IP1)
      G(M)=G(M)-G(JUNE)*G(K)
  725 CONTINUE
  808 N=N+1
      CALL W(1,JA,A(1,J),NA)
  832 KZ=KZ+(36*(ITOTAL+1-NCON)+511)/512
  723 KZ3=KZ3+(36*(ITOTAL+1-NU)+511)/512
  729 CALL LOC(1,JLOC,2352)
      CALL RD(1,JA,CAM,7400)
C       BACK SOLUTION - CAMERA ROWS
      N=6*IPHO
      CALL LOC(1,JLOC,2349)
      CALL RD(1,JA,G,N)
      PRINT 556,ITERAT,G(K),A(6,6)
      G(K)=G(K)/A(6,6)
      DO 731 NU=1,IPHO
      KZ=KZ-(36*NU+547)/512
      CALL LOC(1,JLOC,KZ)
      IF(NU-1)734,734,733
  734 N=5
      M=6
      JUNE=6
      GO TO 735
  733 N=6
      M=7
      JUNE=7
  735 DO 732 I=1,N
      NMI=M-I
      K=K-1
      L=K
      DO 736 J=JUNE,JULY
      L=L+1
  736 G(K)=G(K)-G(L)*A(NMI,J)
      G(K)=G(K)/A(NMI,JUNE-1)
  732 JUNE=JUNE-1
      IF(NU-IPHO)841,842,842
  841 NA=NA+36
      CALL RD(1,JA,A,NA)
  731 JULY=6*(NU+1)
C       BACK SOLUTION - OBJECT ROWS
  842 NA=6*LINE
      CALL LOC(1,JLOC,2331)
      CALL RD(1,JA,A,NA)
```

```
      ITEST=LINE
  742 NROW=3*ITEST
      DO 743 NU=1,IPHO
      NCON=IPHO+1-NU
      M=CAM(NCON,57)+7.
      DO 737 K=8,M
      IF(G(NROW+5698)-CAM(NCON,K))737,738,737
  737 CONTINUE
      GO TO 743
  738 KZ=416+2*NCON
      CALL LOC(1,JLOC,KZ)
      CALL RD(-1,JA,Z,882)
      I=3*(K-7)
      MORT=4500+6*NCON
      MARK=MORT-5
      DO 740 N=1,3
      JOYCE=1
      DO 739 K=MARK,MORT
      G(NROW)=G(NROW)-G(K)*Z(I,JOYCE)
  739 JOYCE=JOYCE+1
      I=I-1
  740 NROW=NROW-1
      NROW=NROW+3
  743 CONTINUE
      G(NROW)=G(NROW)/A(6,ITEST)
      G(NROW-1)=(G(NROW-1)-G(NROW)*A(5,ITEST))/A(4,ITEST)
      G(NROW-2)=(G(NROW-2)-G(NROW)*A(3,ITEST)-G(NROW-1)*A(2,ITEST))/A(1,
     1ITEST)
      ITEST=ITEST-1
      IF(ITEST-1)741,742,742
C       ADD LEAST SQUARES RESULTS TO OBJECT ORDER LIST AND CAM ARRAY
  741 SCALE=CAM(1,7)
      CALL LOC(1,JLOC,400)
      CALL RD(-1,JA,A,NA)
      DO 744 M=1,LINE
      J=1
      JULY=3*M
      JUNE=JULY-2
      DO 744 K=JUNE,JULY
      G(K)=G(K)*SCALE
      J=J+1
      IF(J-3)793,793,794
  793 IF(A(5,M))795,795,744
  794 IF(A(6,M))795,795,744
  795 A(J,M)=A(J,M)+G(K)
  744 CONTINUE
      DO 745 K=1,IPHO
      J=4
      JUNE=4495+6*K+3
      JULY=JUNE+2
      DO 745 I=JUNE,JULY
      G(I)=G(I)*SCALE
      J=J+1
      CAM(K,J)=CAM(K,J)+G(I)
```

```
      C(4,J-4)=G(I-3)
      C(5,J-4)=SQRT(1.-C(4,J-4)*C(4,J-4))
      C(6,J-4)=CAM(K,J-3)*C(5,J-4)+CAM(K,J+53)*C(4,J-4)
      C(7,J-4)=CAM(K,J+53)*C(5,J-4)-CAM(K,J-3)*C(4,J-4)
      CAM(K,J-3)=C(6,J-4)
  745 CAM(K,J+53)=C(7,J-4)
C       DETERMINE MAXIMUM CORRECTION TO ORIENTATION PARAMETERS AND TEST
C       AGAINST LIMIT
      LROW=4500+6*IPHO
      L=4501
      J=4501
  753 DO 749 N=1,2
      IF(ABS(G(L))-ABS(G(J)))750,749,749
  750 L=J
      DO 824 J=1,M
  824 A(I,J)=0.
      CALL RO(1,JA,A,36)
  749 J=J+1
      IF(ABS(G(L))-ABS(G(J)))751,752,752
  751 L=J
  752 J=J+4
      IF(J-LROW)753,753,754
  754 PRINT 533,ITERAT,G(L)
      IF(ABS(G(L))-.00001)746,746,747
C       ITERATION REQUIRED
  747 ITERAT=ITERAT+1
      IF(ITERAT-MAX)748,748,746
  748 CALL LOC(1,JLOC,0)
  673 CALL RO(-1,JA,B,153)
      GO TO 764
C     BLOCK FINALIZED--OUTPUT OF X,Y,Z ON GROUND
  746 PRINT 534
      PRINT 540,((A(J,I),J=1,4),I=1,LINE)
      PUNCH 540,((A(J,I),J=1,4),I=1,LINE)
C       BLOCK FINALIZED--PRINTOUT OF LAST DX,DY,DZ COMPUTED FOR CONTROL
C       STATIONS BY LEAST SQUARES BLOCK SOLUTION
      PRINT 530
      DO 721 M=1,LINE
      IF(A(5,M))843,843,703
  843 IF(A(6,M))721,721,703
  703 JULY=3*M
      JUNE=JULY-2
      PRINT 540,A(1,M),(G(I),I=JUNE,JULY)
  721 CONTINUE
C       BLOCK FINALIZED--OUTPUT OF X AND Y PLATE RESIDUALS
      PRINT 536
      ICUT =2
      SCALE = 0.
      P(1,10)=0.
      P(2,10)=0.
      GO TO 748
  524 FORMAT(1X,I1,1X,E14.8,2(3X,F2.1),2X,I2,3X,I1,F6.6)
  525 FORMAT(7X,I3,3(2X,I1),2X,E14.8)
  526 FORMAT(1X,I9,2(2X,E14.8),37X,I1)
```

```
527 FORMAT(4X,I6,3(3X,E14.8),14X,2I2,I1)
528 FORMAT(/32H GROUND COORDINATES MISSING FOR I6, 5H-STOP/)
529 FORMAT(32H GROUND COORDINATES ENTERED FOR I4, 35H OBJECTS.  EXCEED
   1S 1706 LIMIT--STOP/)
530 FORMAT(/53H   CONTROL          OX                  DY                  DZ/)
531 FORMAT(70H
   1                )
532 FORMAT(/50H ORIENTATION PARAMETER CORRECTION LIMIT IS 0.00001/)
533 FORMAT(14H PROGRAM PASS I1,46H PRODUCES A MAXIMUM ORIENTATION CORR
   1ECTION OF E14.8)
534 FORMAT(/58H    OBJECT       X GROUND          Y GROUND          Z GRO
   1UND/)
535 FORMAT(/7H PLATE I3, 36H NEEDS OVER 5 RESECTION PASSES--STOP)
536 FORMAT(/43H   IMAGE     X PLATE RESID     Y PLATE RESID/)
538 FORMAT(/33H RMS RESIDUAL FOR ENTIRE BLOCK = E14.8)
539 FORMAT(/55H      PLATE       OMEGA               PHI               KAPPA
   1)
540 FORMAT(1X,I9,3X,E14.8,3X,E14.8,3X,E14.8)
541 FORMAT(/53H      PLATE        XO                  YO                  ZO)
542 FORMAT(/54H B L O C K    A D J U S T M E N T    C O M P L E T E D)
543 FORMAT(16H BLOCK CONTAINS I3, 17H PHOTOGRAPHS AND I4, 8H OBJECTS/)
544 FORMAT(47H BLOCK ADJUSTMENT WILL DETERMINE POSITIONS FOR I4, 40H O
   1BJECTS AND EXCEEDS LIMIT OF 1500 -STOP)
545 FORMAT(/7H PLATE I3, 5H HAS I2, 35H IMAGES AND EXCEEDS 49 LIMIT---
   1STOP)
556 FORMAT(/14H PROGRAM PASS I1, 19H LAST PLATE DZO IS E14.8, 12H DIVI
   1DED BY E14.8)
    END
T      SUBTYPE,FORTRAN,LMAP,LSTRAP,PUNCH
    SUBROUTINE INSECT (ITOTAL,FL,LARRY,RESID)
    DIMENSION CAM(200,60),C(20,3),D(6,7)
    COMMON CAM,C,D
    PRINT 547
    LINE=1
    NEIL=1
    IMAGE=1
    MARK=0
    IGO=1
881 IF(LARRY)879,879,878
878 READ 546,(CAM(IMAGE,J),J=11,13),CAM(IMAGE,19)
    GO TO 877
879 READ 546,(CAM(IMAGE,J),J=11,13)
    CAM(IMAGE,19)=FL
877 J=CAM(IMAGE,11)/1000000.
    CAM(IMAGE+1,19)=J
    FK=J*1000000
    CAM(IMAGE,14)=CAM(IMAGE,11)-FK
929 IF(CAM(1,14)-CAM(IMAGE,14))882,901,882
901 IMAGE=IMAGE+2
    GO TO 881
882 JOE=IMAGE
924 IMAGE=IMAGE-2
    MORT=IMAGE+1
904 DO 883 I=1,IMAGE,2
```

```
      DO 884 J=1,ITOTAL
      IF(CAM(J,1)-CAM(I+1,19))884,885,884
  884 CONTINUE
  885 L=5
      DO 886 K=1,3
      C(1,K)=CAM(J,L)
      C(2,K)=CAM(J,L-3)
      C(3,K)=CAM(J,L+53)
  886 L=L+1
C       ORIENTATION MATRIX
      C(4,1)=C(3,2)*C(3,3)
      C(5,1)=-C(3,2)*C(2,3)
      C(6,1)=C(2,2)
      C(4,2)=C(3,1)*C(2,3) + C(2,1)*C(2,2)*C(3,3)
      C(5,2)=C(3,1)*C(3,3) - C(2,1)*C(2,2)*C(2,3)
      C(6,2)=-C(2,1)*C(3,2)
      C(4,3)=C(2,1)*C(2,3) - C(3,1)*C(2,2)*C(3,3)
      C(5,3)=C(2,1)*C(3,3) + C(3,1)*C(2,2)*C(2,3)
      C(6,3)=C(3,1)*C(3,2)
      GO TO(899,895),NEIL
C       FORM AUGMENTED COEFFICIENT MATRIX
  899 K=1
      DO 887 L=15,17
      CAM(I,L) = CAM(I,12)*C(6,K)-(-CAM(I,19))*C(4,K)
      CAM(I+1,L)=CAM(I,13)*C(6,K)-(-CAM(I,19))*C(5,K)
  887 K=K+1
      CAM(I,18) = C(1,1)*CAM(I,15) + C(1,2)*CAM(I,16) + C(1,3)*CAM(I,17)
      CAM(I+1,18)=C(1,1)*CAM(I+1,15)+C(1,2)*CAM(I+1,16)+C(1,3)*CAM(I+1,1
     17)
      GO TO(937,895),IGO
  937 GO TO 883
  895 DO 896 K=1,3
  896 C(8,K)=D(K,4)-C(1,K)
      DO 897 K=1,3
  897 C(9,K)=C(K+3,1)*C(8,1)+C(K+3,2)*C(8,2)+C(K+3,3)*C(8,3)
      GO TO (938,939),NEIL
  938 DO 940 L=15,18
      CAM(I,L)=CAM(I,L)/C(9,3)
  940 CAM(I+1,L)=CAM(I+1,L)/C(9,3)
      GO TO 883
  939 CAM(I,20) = CAM(I,12) - (-CAM(I,19))*C(9,1)/C(9,3)
      CAM(I+1,20)=CAM(I,13) - (-CAM(I,19))*C(9,2)/C(9,3)
  883 CONTINUE
      GO TO(905,912),NEIL
C       FORM NORMAL EQUATIONS
  905 DO 902 I=1,3
      DO 902 J=I,4
      D(I,J)=0.
      DO 902 K=1,NORT
  902 D(I,J)=D(I,J)+CAM(K,I+14)*CAM(K,J+14)
C       FORWARD SOLUTION
      DO 909 I=1,3
      SQR=SQRT(D(I,I))
      DO 908 J=1,4
```

```
  908 D(I,J)=D(I,J)/SQR
      IF(I-3)907,906,906
  907 IP1=I+1
      DO 909 L=IP1,3
      DC 909 J=L,4
  909 D(L,J)=D(L,J)-D(I,L)*D(I,J)
C       BACK SOLUTION
  906 D(3,4)=D(3,4)/D(3,3)
      DC 911 I=1,2
      NMI=3-I
      NMIP1=NMI+1
      DO 910 J=NMIP1,3
  910 D(NMI,4)=D(NMI,4)-D(J,4)*D(NMI,J)
  911 D(NMI,4)=D(NMI,4)/D(NMI,NMI)
      GO TO (941,942),IGO
C       ITERATE XYZ SOLUTION
  941 DO 936 J=1,3
  936 CAM(200,J+10)=D(J,4)
      IGO=2
      GO TO 904
C       TEST TO TERMINATE XYZ ITERATIVE SOLUTION
  942 FK=ABS(D(1,4)-CAM(200,11))*(-CAM(IMAGE,19))/C(9,3)
      IF(FK-0.000001)943,943,941
  943 FK=ABS(D(2,4)-CAM(200,12))*(-CAM(IMAGE,19))/C(9,3)
      IF(FK-0.000001)944,944,941
C       COMPUTE PLATE RESIDUALS
  944 NEIL=2
      GC TO 904
C       DETERMINE MAXIMUM PLATE RESIDUAL AND TEST AGAINST RESIDUAL LIMIT
  912 I=1
      M=I
  916 M=M+1
      IF(M-MORT)913,913,914
  913 IF(ABS(CAM(I,20))-ABS(CAM(M,20)))915,916,916
  915 I=M
      GO TO 916
  914 IF(ABS(CAM(I,20))-RESID)917,917,918
C       BAD RAY
  918 L=I/2
      IF(I-2*L)921,921,922
  921 I=I-1
  922 MARK=MARK+1
      IF(MARK-1)919,919,920
  919 IF(IMAGE-3)920,920,926
  926 PRINT 549,CAM(I,11)
      IF(I-IMAGE)923,900,900
  923 DO 925 K=11,19
      CAM(I,K)=CAM(IMAGE,K)
  925 CAM(I+1,K)=CAM(MORT,K)
  900 NEIL=1
      DO 945 J=1,3
  945 CAM(200,J+10)=D(J,4)
      GC TO 924
  920 PRINT 550,CAM(I,11)
```

```
C        OUTPUT OF X Y Z AND PLATE RESIDUALS
  917 PRINT 548
      PRINT 554,CAM(1,14),(D(K,4),K=1,3)
      PUNCH 554,CAM(1,14),(D(K,4),K=1,3)
      PRINT 553
      DO 935 I=1,IMAGE,2
  935 PRINT 554,CAM(I,11),CAM(I,20),CAM(I+1,20)
      IF(CAM(JOE,11))930,930,931
  930 PRINT 552,LINE
      RETURN
  931 LINE=LINE+1
      PRINT 551
      DO 928 K=11,14
  928 CAM(1,K)=CAM(JOE,K)
      CAM(1,19)=CAM(JOE,19)
      CAM(2,19)=CAM(JOE+1,19)
      NEIL=1
      IMAGE=1
      MARK=0
      IGO=1
      GO TO 929
  546 FORMAT(1X,I9,2X,E14.8,2X,E14.8,2X,E14.8)
  547 FORMAT(//42H OBJECT POSITIONS COMPUTED BY INTERSECTION/)
  548 FORMAT(/58H    OBJECT       X GROUND          Y GROUND          Z GRO
     1UND/)
  549 FORMAT(1X,I9, 34H EXCEEDS RESIDUAL LIMIT--DISCARDED)
  550 FORMAT(1X,I9, 34H EXCEEDS RESIDUAL LIMIT--SEE BELOW)
  551 FORMAT(1H ///)
  552 FORMAT(//40H TOTAL NUMBER OF INTERSECTED OBJECTS IS I4)
  553 FORMAT(/43H   IMAGE      X PLATE RESID     Y PLATE RESID/)
  554 FORMAT(1X,I9,3X.F14.8,3X,E14.8,3X,E14.8)
      END
T        SUBTYPE,BIN
```

Appendix 3

Annotations to Source Fortran Program

The following annotations pertain to the source Fortran program (Appendix 1). The numbered annotations refer to the line numbers that are shown on the right in the program listing. Expressions such as "S792 = L097" are used to mean "Statement number 792 occurs on Line 097 of the listing".

013 The number of words in the dimensioned arrays is 33,679.

014 For use in the intersection subroutine INSECT

015 Constant meaning "first iteration of the block adjustment phase.

016 Constant. IGO = 1 indicates the Resection phase; = 2, the Block Adjustment proper.

017 Constant indicating that the Block Adjustment is not finalized, and a subsequent iteration is in progress.

018 IRE is a count of the number of iterations on the Block solution.

019 Initializing a variously used constant.

020 A disk guard.

021 Job title: see Lines 44 and 258.

023 This is the convergence criterion for the camera angle parameters, particularly applicable to Resection, normally 10^{-5} radian (about 2 arc seconds), fixed in this program, but subject to modification.

026 Clears the first column of the E-array which is needed for the first iteration of Resection for the first photo, to establish an order list in the A-array.

028 Clears the first row in the A-array in order to constitute a valid test in Line 115 as to whether this row is empty. 1500 columns must be cleared because the total number of objects in the Block is not yet known.

S792 = L097 means "Statement 792 is on Line 097".

031 LARRY: zero indicates that a single focal length is used throughout; 1 indicates a possible different focal length for each photo.

FL: focal length.

WT 712: weight factor for observation equations of images 7 to 12 cm from the center (factor 1 built in for 0 to 7) for possible use to recognize variation of image resolution of the lens.

WT 12P: weight factor for images more than 12 cm from the center.

WTCON: a weight factor for control points to regulate collinearity (in addition to "position" weight factor on Line 035).

MAX: maximum number of iterations allowed in Resection to avoid indeterminant case.

RESID: The maximum residual discrepancy in microns allowed in INSECT as a criterion for rejection and error messages; to detect bad data--these are not processed previously.

033-042 Input of all the provisional coordinates for all the objects used in the Block, including control: object identification number, X-coordinate, Y-coordinate, Z-coordinate, XY-weight, Z-weight. These "position" weight factors for the control points are used after the normal equations are formed in the Block adjustment to multiply the coefficients of the respective diagonal terms. ITEST consists of a signal punch of 1 in column 80 of the last card. NCON is a count of the total number of objects which must not exceed 1706; if it does, an error message is printed and the computation is stopped.

044 This is a "stall" statement which assures that the B and E-arrays for the previous photograph have been completely transferred to disk before the new data is input.

045 Five items of data are input for the purpose of directing the computation. B(50,1) is the number of the photograph. B(50,2), ordinarily zero, is 1 if the photograph is the first one of strip, and hence has no useful images on the left side. B(50,3), ordinarily zero, is 1 if the

photograph is the last one of a strip and hence has no useful images on the right side. B(51,1), ordinarily zero, is 1 if the photograph is the last one of the Block. B(51,2), ordinarily zero, is the focal length for the subject photograph, and is used only when more than one focal length is used as indicated by the value of LARRY on Line 031.

046 If LARRY is zero, a single focal length prevails and the computation proceeds to Statement 804 on Line 048; if LARRY is 1, different focal lengths are involved as specified by Statement 805 on Line 047.

048-052 Input procedure for all the images from this one photograph, including nine-digit image identification number, the refined x- and y-coordinates, and signal ITEST = 1 in column 80 of the last card for the photograph.

053 B(51,3) is the number of images on this photograph.

054-056 If the number of images on this photograph exceeds 49, an error message is printed and the computation stopped. Note that some of the 49 are images of control stations. Also, only the first (or 12)18 are used here in Resection whereas all of them are used in the Block. An unlimited number of additional images can be accommodated later in the INSECT subroutine.

057-059 On the first disk CALL, the locator is automatically set at arc zero; thereafter the locations are at arcs 2, 4, 6....398 for 200 photographs.

061 Return here from Line 785.

062 NU is the counter for the rows in the E-array.

063-072 Procedure for ignoring those rows in the E-array that are associated with null images on the first and last photos of all strips.

073 NMI is the integer form of the number of images on the photograph.

074 K is the number of the image being processed. (S792 = L 097)

077 FK is the 6-digit number of the object associated with image K. FK consists of the final 6 digits of the 9-digit image identification number: e.g., if the i.d. number is K = 119 114 331, then FK = 114 331.

078 On all iterations after the first one, extract the data from the A-array because to these object coordinates have been added the dX, dY, dZ corrections.

079 If the adjustment is finalized (or converges) on the first iteration (IOUT = 2), extract the coordinate data from the corrected A-array for the purpose of computing the image residuals.

081-086 The process of transferring the object number, and X, Y, Z object coordinates from the A to the E arrays. S 792 = L 097.

087-097 The process of transferring the object number, X, Y, Z, X-Y weight, and Z weight from G to E arrays.

098 If LAST = 0, then all of the images of this photograph have been processed.

099 If the number of images is less than or equal to 18, then LAST = 0 when Statement 635 is begun.

103 S 637 = L 073

105 Store the E-array on disk arc after the B-arcs. Arcs used are 1, 3, 5...399.

106 Statement 762 constitutes a by-pass of the establishment of the order list L 110 after the initial iteration.

107 If the block is finalized on the initial iteration (IOUT = 2), by-pass the order-list establishment. Statement 785 establishes the order list for unknown objects.

108 S 673 = L 784 resets the disk for the next photograph. Program control goes to 675 if all the photographs have been processed.

109 S 757 = L 258 is the least squares solution for the Block. S 758 = L 276 indicates that the Block is being finalized, therefore proceed to determining the residuals.

111 The value of IMAGE also constitutes the number of rows used in the E-array.

112 Test for presence of data in rows of E-matrix. (E rows 1-6 (or 13-18) are zero if the photograph is the first (or last) one of a strip.) There is no need to clear E before the next photograph because these data are transferred from the A-array order list in proper form.

114 Statement 642 indicates that the E-object is not on this line of the A-array. 640 means that the E-object is already in the A-list, consequently proceed to the next E-object.

115 644 indicates that the A-row contains object data: therefore test the next line. 643 indicates that the A-row is empty; therefore transfer the E-object there.

121 S 646 = L 114.

124 N is the count of the number of iterations of the Resection solution.

126 E(11, J + 1) always pertains to an object near the center of the photograph because of the order in which the input cards are presorted: its X and Y coordinates are taken as the first approximation of X_0, Y_0 of the camera station.

127 The first approximations of sin ω and sin ϕ are set equal to zero.

128 The first approximations cos ω and cos ϕ are set equal to 1.

129 This formulation is explained in Technical Report 32, page 3.

131, 132 Because of the order in which the cards are presorted, these two points are always widely separated.

136 The approximate scale of the photograph expressed as the decimal form of the representative fraction.

137 Initial approximation of sin κ.

138 Initial approximation of flying height Z_0.

139 Initial approximation of cos κ.

141 Updating the count of the number of Resection iterations. This is where the control of the computation returns after the previous iteration from Line 238.

142-146 To prevent the incorporation of an indeterminant case for any Resection solution, none is allowed to iterate more than 5 times. If one does, appropriate data is output and the whole solution is stopped. S 893 = L 241.

147-171 The camera rotation matrix and its partial derivatives. The formulation and arrangement of these data are explained on page

172 613 is a continuation of the Resection phase. S 809 = L 294 is the Block phase where these same foregoing formulas are used.

174-176 The D-array is cleared so that contributions to normal equations can be formed for only two observation equations at a time.

178-181 Only 5 objects on the right side are used for Resection if the photograph is the first one in a strip.

182-185 Only 5 objects on the left side are used for Resection if the photograph is the last one in a strip.

186-187 For the general photograph, 9 objects are used for Resection.

188 S 618 = L 206

190 $X-X_o$, etc.; the B-vector in, e.g., A_3B

192-195 The scalar products A_iB, $\partial A_iB/\partial\phi$, etc.

198 The constant term (residual) p_{11}/A_3B, and the coefficients of the angular terms, e.g., p_{13}/A_3B, in the two observation equations for one image.

200 The coefficients of the linear terms, e.g., p_{15}/A_3B, in the two observation equations for one image. Multiplication by C(1,3) is a "scaling" factor that makes these terms the same general size as the angular ones; the factor happens to be the flying height.

201 The algebraic signs of the constant terms (residuals) is changed so that the results of the solution will constitute <u>corrections</u> rather than <u>errors</u>.

202-206 The contributions to the system of normal equations for Resection are formed for the two observation equations for an image, and the values are added to the appropriate values stored previously in the D-array. (See next annotation also.)

208-223 S 699 = L 216. The formation of normal equations, and their forward and back solutions is explained in Technical Bulletin 21, page 38, and Technical Bulletin 23, page 6.

224 The "answers" of the solution.

225-226 The effect of the "scaling" factor (C(1,3)) in Line 200 is cancelled so that the linear corrections are expressed in appropriate units of measurement.

229 The linear corrections are added to the camera parameters $X_o + dX_o$, etc.

230-235 The angular corrections are added through the use of the standard trigonometric formulas for sin $(\alpha + \beta)$, etc. It is assumed that β, ($d\phi$, etc.), is a small angle so that sin $d\phi$ = arc $d\phi$ and cos $d\phi = (1 - \text{arc}^2 d\phi)^{\frac{1}{2}}$ are essentially valid. Although they will not be entirely valid on the first iteration in Resection, subsequent iterations are essentially correct as $d\phi$ becomes small: in fact, arc ϕ, etc., is each smaller than 10^{-5}.

237-239 Are all of the angular corrections less than 10^{-5}? If not, return to S 610 = L 147 for another iteration of Resection for this photo. If yes, store the final Resection parameters.

241 IPHO is a serial count number of the photographs.

242 The serial count number is stored in the CAM-array.

244 Storing the Resected cosines of the three angular camera parameters.

245 Storing the Resected sines of the three angular camera parameters.

246 Storing the three Resected linear camera parameters.

247 S 604 = L 044 to Read cards for next photograph unless all of them have been processed.

248 A test to stop after all Resections are computed if one or more required more than 5 iterations.

252-254 Error message if more than 1500 objects are in order list in A-array.

255 ITOTAL is the total number of photographs in the Block--statement occurs only on initial iteration.

256 Output of size of block (only on initial iteration of Block).

257 Number of words in order list in A-array (only on initial iteration of Block).

258 A test number used as a "disk guard."

259 Locates disk arc 400.

260 Stores order list of A-array into disk arcs 400-417.

262 Identifies the Block adjustment phase.

263 Cells 1 to 5700 of the G-array are cleared to provide storage space for the constant terms of all the normal equations.

266-269 The order list is stored in cells 5701 to 10,200 of the G-array: object number, XY-weight, Z-weight.

270 Arc locators.

272 A "stall" instruction (parking orbit) until all of the order list in A-array has been stored in disk (L 266).

273 Clear A-array to provide storage for formation of Z1 portion of normal equations.

277 Arc locator.

279 Disk guard. Transfer to here from L420.

280 Locate disk arc.

281 The B- and E-arrays for photo (IPHO+1) are transferred from disk to core.

282 Go to S759 for the orientation solution. Go to S768 = L288 to compute the residuals if the solution is being finalized.

285 Clear cells 10,211 to 10,238 in the G-array for the summation of the Z3-portion of the normal equations for one photo at a time.

288 IPHO is the number of the photo now being processed.

289-292 Transfer from CAM-array to the C-array the camera station parameters and the sines and cosines of the three orientation parameters for this photo.

293 Go to S610 = L140 to form the C-array orientation factors.

294 A "stall" instruction to allow completion of L281 before proceeding.

296 S 767 = L 299 is for a single focal length for the job; S 807 is for different focal lengths.

300 For the first photos of strips: S 651 = L 308.

303 For the last photos of strips.

307 Not an end photo of any strip.

308 Number of images on this photograph.

309 NV is the image number on photo IPHO now being processed. S 656 = L 413

310 S 866 = L 320 to form the two observation equations. S 867 = L 311 to compute the image residuals if the orientation has already been finalized.

311 Search for the J-value locating in the A-order list the object that corresponds to image NV. (Note for Lines 311-319: At control stations the lack of collinearity is due to the image residual plus the effect of the control station which is not been allowed--through weighting--to adjust; this section applies the computed dX, dY, dZ, thence the residuals v_x, v_y can be evaluated later as p_{11}/A_3B, p_{21}/A_3B.

315 Go to S 870 if there is no XY-weight; otherwise go to S 871.

316 X+dX and Y+dY for weighted control stations.

318 Go to S 866 if there is no Z-weight; otherwise go to S 872.

319 Z+dZ for a weighted control station.

320 $X-X_o$, $Y-Y_o$, $Z-Z_o$.

322 Go to S 873 to form observation equations; to S 874 to compute image residuals if the orientation solution has been finalized.

323-324 This limits the loop on L 327 to computing A_iB only if image residuals are needed.

327-330 A_iB, $(\partial A_i/\partial\omega)B$, etc.

331 Go to S 770 = L 407 to compute the residuals if the orientation solution has been finalized.

335 $p_{j1}/A_3B \ldots p_{j4}/A_3B$, j = 1,2.

337 $-p_{j5}/A_3B \ldots -p_{j7}/A_3B$, j = 1,2. The term CAM(1,7) (altitude) is a scaling factor applied to make these terms the same general magnitude as the linear terms on L 335.

341 Transfers the p-coefficients for the <u>object</u> terms dX, dY, dZ into rows 3 and 4.

343 Transfers the linear p-coefficients for the camera terms into rows 3 and 4.

344 Transfers the constant terms $-p_{11}/A_3B$ and $-p_{21}/A_3B$.

346-348 Search for the j-value to locate in the order list the object that corresponds to image NV.

349 If an XY-weight is present, go to L 351; if not, go to L 350.

350 If a Z-weight is present, go to L 351; if not, go to L 354.

351 Multiply the two observation equations by the factor WTCON to influence the colinearity condition.

356 Distance (radius) from the principal point to the image in <u>meters</u>.

357 If the radius is less than .07 meter, the weight factor is 1; if more, proceed to next instruction.

358 If the radius is between .07 and .12, go to next line; if greater, go to L 366.

359 Defines the value of the "resolution" weight factor for .07 to .12.

361 Defines the value of the weight factor for radius greater than .12.

362 Multiply the two observation equations by the "resolution" weight factor.

366-368 Clear rows 5 to 13 of P-array in which to form the contributions of two observation equations for one image to the system of normal equations.

369-372 I is the number of a column of the two observation equations. M is equal to I to avoid computing terms below the diagonal matrix for the 9 normal equations for this image in rows 5 through 13.

373 Searches for the J-value in the order list locating the object corresponding to image NV.

375-380 Adds contributions of the dX, dY, dZ coefficients of the two observation equations for an image (stored in P) to the accumulating values in A. This portion is called the Z1 sector as shown in Figure . Note that other contributions to A also come from other photos: also that Z1 must be vacated for the next image.

381-383 Adds contributions of the constant terms for the dX, dY, dZ equations to the accumulated values in cells 1-4500 of the G-array. This is the upper portion only of the Z2 sector. Other contributions to these terms for this object come from other photos.

384-389 These terms are from the Z-sector and are transferred to the Z-array for each image. These terms do not receive further contributions: they are the products of the object coefficients and the camera coefficients. They are stored for photo IPH in rows 1-147: the first photo in rows 1-3, the second in rows 4-6; etc.

390-398 The terms in the Z3-sector are the products of the camera parameters by themselves, and contributions from each image in the P-array are added to the accumulating values in the G-array until all the images on a photo are processed. They consist of the 36 terms of a 6x6 matrix where the terms below the diagonal are zeros, and are located in cells 10201-10236 of the G-array.

399-402 The contributions of the constant terms in the lower (camera) portion of the Z2-sector in the P-array are added for each image to the accumulating values in cells 4501-5700 of the G-array.

403 The object number is stored in the CAM-array for photo IPHO.

405 Go to S656 = L 413 to process the next (NU+1) image on this photo IPHO.

406 Where the computation is directed here from L 331, only the residual (constant) terms need to be recomputed instead of all the seven coefficients.

408 Computes $vx = p_{11}/A_3B$ and $vy = p_{21}/A_3B$

409 Prints the object number and two residuals.

410-411 Accumulate the residuals in preparation for determining the precision of the computation.

412 SCALE here has no relation to L 136. It is initialized on L 786 after the Block is adjusted, and incremented here by 2.

413 From line 405.

414 S 693 = L 442

415 Used only after the Block has been adjusted.

416 Go to 772 if the photo is the last one of a strip; otherwise to 773.

417 Go to 774 if there are more than 18 images input for photo IPHO: otherwise to 773.

418 If the photo is the last one in the Block, go to S 775 = L 426; otherwise to 777.

419 Arc locator for B and E arrays for photo (IPHO + 1).

420 S 776 = L 279

421-423 Procedure if more than 18 images have been input for photo IPHO. S 651 = L 318

426 Compute RMS precision indicator for Block from accumulated total: $RMS = [(\Sigma v_x^2 + \Sigma v_y^2)/SCALE]^{\frac{1}{2}}$

427 Print RMS

428 Heading for print columns for data to follow.

430 Sin ω, φ, κ.

431 Cos ω, φ, κ.

432 Column headings for data to follow.

433 Photo No. X_o, Y_o, Z_o.

434 Call Intersection Subroutine.

436 Block Adjustment Completed.

439 Go to S 776 = L 015 to initialize for the next Block.

442 Go to 678 if this is the last photo of a strip; otherwise to 680 and continue this sequence of instructions through L 454.

443 Go to S 679 = L 455 if more than 18 images are input for photo IPHO: otherwise to 680.

444 Go to S 677 = L 458 if this is the last photo in the Block; otherwise to 692.

445 The number of objects on this photo contributing observation equations to the Block adjustment.

446 Arc.locator for B and E arrays for photo (IPHO + 1).

447-448 Transfer core Z-array for photo IPHO onto disk.

449-450 Transfer core G (Z3) for photo IPHO onto disk.

451 Arc locator for Z-sector for photo (IPHO + 1)

453 Arc locator for Z3-sector for photo (IPHO + 1).

454 S 756 = L 279

455-457 From line 443 if there are more than 18 images on photo IPHO. S 651 = L 308.

458 From line 444 if last photo is the Block, and terminating in line 462. This is the number of objects on this photo contributing observation equations to the Block adjustment.

459-460 Transfer core Z for photo IPHO into disk.

461-462 Transfer G(Z3) for photo IPHO into disk.

465 If the object has an XY-weight, go to the next line; if not, go to S 846 = L 468.

466-467 Multiply the two diagonal terms for dX and dY by the XY-weight.

468 If the object has a Z-weight, go to the next line: otherwise to L 470.

469 Multiply the diagonal term for dZ by the Z-weight.

471 The solution of the normal equations for the Block is accomplished in four sections.

Section I. Forward solution involving the terms from the Z1 and Z2 sectors--Lines 472-518

Section II. Forward solution involving the terms from the Z and Z2-sectors--Lines 519-584

Section III. Forward solution involving the terms in the Z3 and Z2-sectors--Lines 585-669.

Section IV. The back solution--Lines 670-779.

472 M is the object number, S 681 = L 521. The Z1 sector for an object consists of six terms arranged in stair-step style, as it comprises a 3x3 matrix, there being no terms below the diagonal, so that three terms are on the first (X) row, two on the second (Y), and one (Z) on the third.

474 The last Z1-term on a given object row.

476 S 682 = L 492

479 Compute the square root of the leading term of the row in Z1.

481 Divide all the terms in the row of Z1 by the square-root value.

483 Divide the constant term Z2 for this row by the square root.

484 If the object row is less than 3 proceed with the following computation: if it is equal to 3, go to the next sequence. S 685 = L 493

485-491 Computes the effects of the previous square-root row on the subsequent terms.

492 Last Z1-term on row (I + 1).

493 S 681 = L 521

494-497 If object M is imaged on photo NU, go to S 688 = L 499; if not, go to L 497.

498 S 681 = L 521

500 Transfer into Z-core the Z-array stored in disk for photo NU.

502 MARK is the (first row minus 1) in Z for the image of object M on photo NU.

503 MORT is the last (3rd) row in Z for the image of object M on photo NU.

505 S 689 = L 518. This loop computes the effect of the square root row of Z1 on the Z(camera) rows for photo NU.

509 Divides terms of Z (row MARK) by the square-root term.

510 If the object row is less than 3, procede with the next instruction; if it is equal to 3, exit from the loop by going to S 686 = L 516.

512-515 Effect of the square-root row on the Z rows after row MARK.

516 Transfer core Z for photo NU back onto disk.

520-521 Transfer core A(Z1) onto disk. Note that NA = 6*LINE from L 257.

522 Arc locator for Z3 for first photo in the Block.

523 S 704 = L 584

524 Number of photos on line with NU in A(Z3) array.

525 Number of columns of A required to hold uncompressed Z3.

526 Number of words in uncompressed Z3 for photo NU.

527 Arc locator for Z of photo NU.

528 Last CAM column containing an object imaged on photo NU.

529 Total number of rows in Z-array for photo NU.

531-533 Clear A-array for storing uncompressed Z3 data of photo NU.

534-535 Transfer disk Z3 for photo NU into core A (uncompressed).

536-537 Transfer disk Z for photo NU into core Z.

538-541 Pairs of coefficients (six in all) of camera parameters in the Z-sector for an object on photo NU are multiplied and their products are subtracted from the appropriate terms in the Z3-sector. In the process each coefficient is used in turn as a (constant) multiplier of each of the remaining (variable) coefficients (including itself) in each row.

542 ITEST is the first CAM column containing an object falling on photo NU.

543 Have all the objects that appear on photo NU been processed? If so, go to S713 = L 585; if not, proceed to the next instruction.

544 LAST is defined as the third row for an object in the Z-array for photo NU.

545 MARK is similarly defined as the first row.

546 NCON is defined as the number of photo after NU.

547 Have the photos in the block been tested whether they include an image of this object. If so, proceed to the next step; if not, go to S 711 = L 566.

548-550 J is the location of ITEST in the order list.

552 N is the dZ_o-row in G(Z2) for photo NU.

553 K is the dw-row in G(Z2) for photo NU.

554-559 Similar to 538-541 above, this is for the photo NU products of the camera coefficients times the constant terms stored in Z2, and the results are stored in G(1 to 4500).

560 Defines the next column of CAM that contains the next object that appears on photo NU.

562 Go to S 712 = L 546 to process the object in column ITEST

563-567 Does object ITEST on photo NU also appear on photo NCON? If so, proceed to next step. If not, go to S 710 = L 546 to test next photo (NCON+1).

568-570 Transfer disk Z-array for photo NCON into core Y-array.

571 JULY is defined as the <u>last</u> column in the uncompressed A(Z3) for photo NU where the object also appears on photo NCON.

572 JUNE is similarly defined as the <u>first</u> column in the uncompressed A(Z3) data for photo NU where the object also appears on photo NCON.

573-580 Similar to lines 538-541, pairs of coefficients for the object on photo NU are multiplied by the coefficients for photo NCON, and the product subtracted from the appropriate Z3-term.

581 Go to S 710 = 546 to test for appearance on photo (NCON + 1)

582-583 Transfer to disk the entire uncompressed A(Z3) data for photo NU.

584 Arc locator for Z3 data for photo (NU + 1).

586 N is defined as the number of columns of Z3 for the first photo in the block.

587-588 Transfer G(1) through G(N) to disk. Note that N does not exceed 1200.

589-590 Transfer 37 columns of CAM-array to disk.

591 Beginning disk arc for Z3 rows of photo 1.

592 Processing Z3 rows for photo NU. S 723 = L 668

595 JULY is defined as the number of columns in Z3 for photo NU.

596 NA is defined as the number of words in the Z3 row for photo NU.

597-598 Transfer from disk the Z3 rows for photo NU into the A-array.

599 Reset the disk arc KZ3 for later use.

601 Extract the square root of the leading term of row I.

602-603 Multiply all non-zero terms of row I by the reciprocal of the square root.

604 K is defined as the number of the constant term (Z2) of row I for the photo NU.

605 The constant term times the reciprocal of the square root term.

606 S 728 = L 613

607 IP1 is defined as the first row following the square-root row I.

608-612 Effect of the square-root row I on the rows that follow for Z3 and constant terms on photo NU.

614 Transfer Z3 of NU back onto disk.

615 S 829: transfer Z3 of photo NU to CAM-array to include the effect of photos after NU. S 723 = L 668: NU is the last photo in the block. S 729 is never exercised.

616-625 Transfer Z3 for photo NU into CAM array.

626 For photos after NU.

627 Have all the photos in the block been checked for overlap onto photo NU? If so, go to S 830 = L 638; if not, proceed to the next instruction.

628 N is defined as the <u>last</u> column in Z3 for NCON in the A-array.

629 M is similarly defined as the <u>first</u> column.

630-633 Is the 6 by 6 square for photo NCON all zero? If so continue to next step; if not go to S 818 = L 636.

634 The 6 by 6 square for photo NCON is all zero; therefore set zero in CAM column 37.

635 Go to S 724 = L 626 to test (NCON+1).

636 The 6 by 6 square for photo NCON is <u>not</u> all zero; whence set 1 in CAM column 37.

637 Same as S 635 above.

638 Set zero for NU in CAM column 37.

639 NCON is defined as the number of the photo being processed if it overlaps photo NU. S 832 = L 667.

640 Does photo NU overlap NCON? If so, proceed; if not, exit to S 835 = L 667. Note that if NCON = NU, also exit to L667.

641 Set disk arc for NCON.

642 NA is defined as the number of words on a row of Z3 for NCON.

643 J is defined as the beginning column in A-array for Z 3 data of photo NCON, for use in recognizing the stairstep arrangement of the data.

644 Transfer from disk to core A the Z3 data for photo NCON

645 Reset disk arc KZ for NCON for later use.

646-657 Transfer row I of the Z3 data for photo NU from CAM to G(1 to JULY).

647 S 808 = L 665

658-664 Similar to L 538, the products of all pairs of coefficients in Z3 are subtracted from the appropriate terms below for the coefficients of the camera parameters for photos NU and NCON, as well as the constant terms (Z2) in this sector.

658 L is defined as the row of the Z3 data for photo NCON now being processed.

659 M is defined as number for dw through dZ_o for the Z2 constant term for NCON = 2, etc.

666 Transfer the Z3 data for photo NCON back to disk.

667 KZ is the beginning disk arc for Z3 for photo (NCON+1).

668 KZ3 is the beginning disk arc for Z3 for photo (NU+1).

669-670 Return from disk the 37 columns of the CAM-array.

671 The Z3 and part of the Z2 sectors, solving for the six corrections to the camera parameters for each photograph through substitution back into the rows.

672-674 Return from disk the data in the G(1-N) array.

675 Print the last two terms of the forward solution for visual inspection. If the denominator is relatively very small, the solution may be invalid due to (1) a dependent condition, (2) round-off, (3) or possibly some other cause. Also, the denominator should not change in the first two significant digits for successive solution or iteration, although changes in only the third to fifth digits has been experienced; a change in the first digit would indicate that the iterative solution might fail to converge.

678 KZ is the beginning disk arc for Z3 data for photo (NU+1).

679 Set disk arc to KZ for later use.

680 If (NU=1) is the last photo in the Block, proceed; if not skip to S 733 = L 685.

695 These are the answers to the corrections for the adjustment. dw...dZ_o for photo NU.

697 Continue solving back solution as for L 695; if completed, go to S 842 = L 702.

698 NA is defined as the number of words in the Z3 data for photo (NU+1).

699 Transfer Z3 data for photo (NU+1) from disk to core A-array.

700 JULY is defined as the last column in the A-array containing Z3-data for photo (NU+1).

701 Similar to L 671, this is for the Z, Z1, and Z2 sectors, solving for the three corrections dX, dY, dZ to the coordinates of each ground object through substitution back into the rows.

702-704 Transfer Z1 into the A-array from disk.

705 ITEST is defined as the last object in the Block because, in a back solution, the computation procedes from the "bottom" toward the "top", or from the "last" toward the "first".

706 NROW is defined as the location in G(1 to 4500) (Z2) of dZ for object ITEST.

708 NCON is defined as the photo number to be tested for the presence of object no. ITEST.

709-713 Does object ITEST appear on photo NCON? If so, using the value of k, go to S 788 = L 714; if not, go to S 743 = L 728.

714-716 Transfer from disk the Z-data for photo NCON into core Z-array.

717 I is defined as the last row for object ITEST in Z-array for photo NCON.

718 MORT is defined as the location of dZ_o...dw for photo NCON in G(4501 to 5700) (Z2).

720-726 In the process of substitution, products of coefficient times previously computed correction are subtracted from the constant terms for dZ, dY, dX for photo NCON located in G(1 to 4500), which is Z2.

727 NROW is defined as the location number in G(1-4500) (which is Z2 data) of dZ for object ITEST.

729-732 The dX, dY, dZ corrections (answers) for object ITEST.

733 ITEST is modified to indicate the next object to be processed. The computation begins at the end, proceding toward the first object of the Block.

734 If the object is the last one to be processed, proceed; if not, continue the process by returning to S 742 = L 706.

736 SCALE is the scaling factor used on L 337.

737-738 Transfer from disc the order list into Core A. Note that still NA = 6*LINE.

739 M is defined as the order of an object. S 744 = L 750.

741 JULY is defined as the location of the dZ-correction for the object M in the G(1-4500) array which contains the Z2 data.

742 Similarly, JUNE is defined as the location of the dX-correction for object M.

744 The effect of the scaling factor introduced on L 337 is removed here.

747 If an XY-weight is present, the correction is not applied to the input coordinates, whence continue to the next object; if no weight is present, go to S 795 = L 749.

748 If a Z-weight is present, the correction is not applied, whence continue; if no weight is present, proceed with the next instruction.

749 The corrections are added to the X, Y, Z input coordinates of the object.

751 K is defined as the photo to which the six corrections dX_o, dY_o, dZ_o, $d\omega$, $d\varphi$, $d\kappa$ are to be added. S 745 = L 764

753 JUNE is defined as the location of dX_o for photo K in the G(4500-5700) array which contains Z2-data.

754 JULY is similarly defined as the location of dZ_o.

756 Removal of the effect of the scaling factor introduced on L 337.

758 The dX_o, dY_o, dZ_o corrections are added to the resected coordinates of the camera station.

759 Transfer of angular corrections from G to C-arrays. It is considered that $d\omega = \sin d\omega$, $d\varphi = \sin d\varphi$, $d\kappa = \sin d\kappa$

760 Determination of the cosines (all plus) corresponding to the sines in the previous step.

761-762 The sines and cosines of the three angles from the resection each corrected through use of standard trigonometric formulas for the sine (cosine) of the sum of two angles.

763-764 The corrected sines and cosines of the three angles are stored in the CAM array.

767-776 The maximum absolute correction encountered during this iteration for any orientation angle is stored in G(L).

770 S 753 = L 773

776 S 753 = L 770

778 Print the maximum orientation correction encountered during this iteration.

779 If the maximum exceeds 10^{-5}, go to S 747 = L 781 to begin new iteration; if not, go to S 746 = 787 to terminate the computation.

782 MAX is the specified maximum number of iterations allowed by the input L 031. If the number of iterations is less than MAX, proceed to next step to begin a new iteration; if more than MAX, go to S 746 = L 787 to terminate the computation.

783-784 Transfer from disk to core B the refined coordinates for the next photo. The disk arcs advance automatically for each photo: 0, 2, 4, 6...398.

785 S 764 = L 061

787 Column headings. S 534 = L 820

788-789 Object No., X, Y, Z. S 540 = L 827

793 M is an object number S 721 = L 799

794-795 Testing for the presence of control weights. If a weight is present, proceed to S 703 = L 796. If no XY-weight, test for Z-weight, if no Z-weight proceed to S 721 = L 799.

796 JULY is the location of dZ for object M in G(1-4500) which is Z2 data.

797 Similarly, JUNE is the location of dX.

798 Print dX, dY, dZ.

801 Photo (plate) residuals. S 536 = L 823

804 Storage address for accumulated Σv_x^2 .

805 Similarly for Σv_y^2.

842 Heading title. S 547 = L 994

843 Total number of objects processed.

844 If NEIL is 1, the computation proceeds with the least squares solution; if NEIL is 2, only the residual discrepancies are computed (the two use some of the same formulation).

846 MARK is the count number of image rays whose residual(s) exceed RESID input on L 031.

847 If IGO = 1, the term A_3B is set equal to 1 because sufficient data are not yet available to compute its value; if IGO = 2, A_3B is computed.

848 Go to S 879 if a single focal length prevails; if not, go to S:878.

849 Input image number, refined x, and y image coordinates, and focal length.

851 Input the same, except for focal length.

853 J is the photo number in fixed-point notation.

854 This is number of the photo in floating point notation, 853 and 855 accomplishing a desired truncation of an image number.

856 The number of the object in floating point.

857 Test to determine whether this is proper object. If this is the same object, read in the next image: S 881 = L 848. If this is a different object, proceed to compute (S 882 = L 860). Each object is computed through the use of several images one on each of several photos. The object number remains constant until all images are processed.

859 Read in the next image.

860 The row in CAM containing the x, y-input for an image associated with a new object.

861 The first row of the last image associated with the object now being computed.

862 Similarly, the last row.

863 S 883 = L 906

864-865 Finding the value of J that locates in the CAM-array the photo that has image on row I.

868-871 Transfer of data from CAM-array to C-array.

869 X_o, Y_o, Z_o

870 sin ω, sin φ, sin κ

871 cos ω, cos φ, cos κ

873-882 Computation of the nine elements of the orientation matrix for the photo in the same manner (but abbreviated for the Intersection routine) as on line L 131ff

874 a_{11}

875 a_{21}

876 a_{31}

877 a_{12}

878 a_{22}

879 a_{32}

880 a_{13}

881 a_{23}

882 a_{33}

883 If the intersection solution is needed, proceed to next step; if only the residuals are needed, go to S 895 = L 894.

886 L = 15--X-coefficient; L = 16--Y; L = 17--Z.

887-888 Formation of the p-coefficients of the linear terms as shown in the formulation. $p_{15} = xa_{31} - za_{11}$,.. $p_{27} = ya_{33} - za_{23}$. CAM(I,19) is the focal length z.

889-892 Formation of the coefficients for the observation equations for Intersection: $X_o\ p_{15}\ dX + Y_o\ p_{16}\ dY + Z_o\ p_{15}\ dZ$, etc.

893 To by-pass the formation of the image residuals at this time, go to S 937 = L? if IGO = 1, setting $A_3B = 1$; but proceed to the next step if IGO = 2, computing A_3B.

895 $X-X_o$, $Y-Y_o$, $Z-Z_o$

898 A_1B, A_2B, A_3B

899 S 939 = L 904

900-902 Dividing the coefficients by A_3B.

903 Skipping computation of residuals.

904-905 The residuals: $v_x = x - zA_1B/A_3B$; $v_y = y - zA_2B/A_3B$.

906

907 Go to S 905 for the equation solution or to S 912 = L 947 for the residuals, analysis and recycle for next image.

909 As all the observation equations are tabulated in a list, the normal equations are formed in one loop.

931 The results of the solution: the least-squares values for X, Y, Z as determined by 2 or more image rays.

945 S 904 = L 863

947-953 CAM (I,20) contains the largest image residual.

954 If CAM (I,20) is larger than the input residual limitation from L031, proceed to next statement for the analysis of the excessive discrepancy, otherwise go to S 917 = L 973 to output the solution.

956-957 An even-odd test. If the difference is zero, the number is even, the excessive residual is v_y and proceed to S 921; if the difference is plus, the number is odd, the excessive residual is v_x, and go to S 921.

958 I is defined as the nine-digit number is the row of the CAM-array that contains the image for the excessive residual.

960 If the difference is zero, there is only one excessive residual; if plus, there are two. S 920 = L 971

961 If the difference is plus, proceed to next step as more than two images remain. Otherwise skip to S 920 = L 971. (As a solution does not exist for fewer than two images, it is not permissible to discard one if only two are present.)

962 Error message to notify that a given image is discarded. S 549 = L 997

963 If the last image is OK, proceed; if excessive, go to 967.

964-966 Replace the image having the excessive residual with the last image.

967 This directs the procedure to the least-squares intersection solution (rather than the determination of residual discrepancies).

971 Print error message about second had image.

974-975 Print Object Number X, Y, Z. S 546 = L 993.

978 Print Image Number v_x, v_y.

979 If zero (blank card at end of data), proceed; if not, return from subroutine to the main program, out to L 436.

982 Four blank lines for spacing the printout.

983-987 Transfer data for first image of new object into CAM-array, rows 1 and 2.

992 Go to S 929 = L 857 to process the next object.

A binary disk subroutine (consisting of 66 cards), called the input-output package, is added to the program. As this does not constitute photogrammetry, it is omitted because it has only to do with the utilization of the particular computer.

Appendix 4. Sample Input Data

```
BLOCK ADJ. KANSAS RC-9 NOV. 1966
  +.08820000E+00    10    10    3    1    25
     1101     .56225859E+05    .21429670E+05    .20917130E+03    3 3
     1102     .54498302E+05    .13394950E+05    .23094113E+03    2
     4101     .37433934E+05    .17407227E+05    .38807436E+03    3 3
     5101     .27453759E+05    .17511433E+05    .43101464E+03    3 3
     8101     .11168960E+05    .19727741E+05    .47347432E+03    3 3
    10101    -.32609945E+04    .17700162E+05    .48033718E+03    3 3
    14101    -.25768361E+05    .15195127E+05    .45525331E+03    3 3

   175101     .13195963E+05   -.49299031E+05    .24910294E+03    2
   180101     .43916631E+05   -.48610019E+05    .12893270E+03    2 2
     1801     .57028980E+05    .11930238E+05    .20405955E+03
     4801     .37015039E+05    .19062630E+05    .37397010E+03
     6801     .23288591E+05    .20739226E+05    .42255568E+03
     8801     .11259055E+05    .20700101E+05    .45064785E+03
    12801    -.16106685E+05    .19096908E+05    .43308636E+03
    14801    -.24207320E+05    .20758910E+05    .41480793E+03
    23801     .20919070E+05    .87388205E+04    .44851185E+03    1
    26801     .43436943E+05    .14288335E+05    .33293308E+03
    35801     .36996425E+05    .61292302E+04    .38201646E+03
    36801     .32222258E+05   -.32391293E+03    .40290908E+03    1
    43801    -.11289233E+05    .61836364E+04    .48767965E+03    1
    46801    -.30566684E+05    .62721543E+04    .40064760E+03

     2101     .47013707E+05    .11235615E+05    .32695089E+03
     9101     .47845354E+04    .12966418E+05    .48299162E+03
    10102    -.49920885E+04    .10976532E+05    .49540313E+03
    12101    -.16127965E+05    .16220397E+05    .46896808E+03
    16101    -.17797602E+05    .61776726E+04    .49966522E+03
    18101    -.11782311E+05    .89322333E+04    .50336568E+03
    19101    -.93255056E+03    .74005867E+04    .48546899E+03
    23101     .17714952E+05    .93932976E+04    .46674610E+03
    25101     .34413791E+05    .69288269E+04    .40729405E+03
    33101     .46759750E+05   -.85060078E+03    .31954788E+03
    37101     .24427165E+05   -.18204981E+04    .44604741E+03
    39101     .12852272E+05    .26288075E+04    .48339248E+03
    40101     .55938497E+04    .30459810E+04    .48542273E+03
    41101     .24468051E+04    .43169371E+02    .51095958E+03
    42101    -.51522653E+04    .29249644E+04    .51850090E+03
    43101    -.12918998E+05   -.26942721E+04    .48839785E+03
```

Weight factor designations.

Approximate coordinates of objects

182331	.57786697E+05	-.45652195E+05	.43374635E+02	
183310	.64113970E+05	-.52411786E+05	.82788232E+00	
183311	.64185803E+05	-.52363894E+05	.82219070E+00	
183320	.62639097E+05	-.39048707E+05	.81892615E+02	
183321	.62508353E+05	-.39060546E+05	.85054798E+02	
183330	.64062540E+05	-.45412786E+05	.25643245E+02	
183331	.63931998E+05	-.45256804E+05	.17614906E+02	
099	1			1
99098310	.26072110E-05	-.10031076E-05		
99098311	.26072110E-05	-.10031076E-05		
99098320	.26072110E-05	-.10031076E-05		
99098321	.26072110E-05	-.10031076E-05		
99098330	.26072110E-05	-.10031076E-05		
99098331	.26072110E-05	-.10031076E-05		
99099310	-.38566617E-02	-.90284321E-01		
99099311	.27558987E-03	-.98343620E-01		
99099320	-.63197234E-03	.83681593E-01		
99099321	-.69614673E-03	.90507594E-01		
99099330	.31189287E-02	-.14157134E-02		
99099331	.18131009E-02	-.37635762E-02		
99001310	.71246310E-01	-.93067104E-01		
99001311	.66550919E-01	-.96743240E-01		
99001320	.85681899E-01	.82730900E-01		
99001321	.87035053E-01	.90449078E-01		
99001330	.85883611E-01	-.10140917E-01		
99001331	.84634929E-01	-.77218846E-02		
99029320	.36716626E-01	-.16787524E-01		
99029321	.38836142E-01	-.18143335E-01		
99029330	.48869559E-01	.71967035E-01		
99029331	.41582500E-01	.69652914E-01		
99030320	-.40956012E-01	-.14928699E-01		
99030321	-.44083711E-01	-.19426094E-01		
99030330	-.40470157E-01	.65334140E-01		
99030331	-.40542685E-01	.69314580E-01		
99031310	-.98014052E-02	.91394982E-01		
99031311	-.98906170E-02	.94789460E-01		
99032310	.72111972E-01	.83531697E-01		
99032311	.72154931E-01	.86410506E-01		
99001101	.94705763E-01	-.66583118E-01		1
001				
1099310	-.74820422E-01	-.96135748E-01		
1099311	-.69998941E-01	-.10400001E-00		
1099320	-.86904369E-01	.77503284E-01		
1099321	-.87560685E-01	.84143787E-01		
1099330	-.75577457E-01	-.60248293E-02		
1099331	-.76704496E-01	-.84761173E-02		
1001310	.85034831E-03	-.92291048E-01		

Coordinates of images

Appendix 5. Sample Output Data

```
BEGIN EXECUTION
BLOCK ADJ. KANSAS RC-9 NOV. 1966

ORIENTATION PARAMETER CORRECTION LIMIT IS 0.00001

BLOCK CONTAINS 180 PHOTOGRAPHS AND 1126 OBJECTS

CHECKPOINT TAKEN ON CKPT1--TIME INTERVAL 39.7 MIN.

CHECKPOINT TAKEN ON CKPT2--TIME INTERVAL 47.7 MIN.

CHECKPOINT TAKEN ON CKPT1--TIME INTERVAL 39.4 MIN.

PROGRAM PASS 1 LAST PLATE DZO IS -.74816469E-04 DIVIDED BY  .84343903E-01

PROGRAM PASS 1 PRODUCES A MAXIMUM ORIENTATION CORRECTION OF -.79135659E-03
```

OBJECT	X GROUND	Y GROUND	Z GROUND
99310	.63111022E+05	.22823972E+05	.10170144E+03
99311	.62849206E+05	.23403626E+05	.10547234E+03
99320	.62308203E+05	.10808779E+05	.16992674E+03
99321	.62290592E+05	.10349126E+05	.17304452E+03
99330	.62327375E+05	.16631171E+05	.12511892E+03
99331	.62425879E+05	.16789156E+05	.12554748E+03
175311	.14243703E+05	-.52521388E+05	.21487126E+03
175101	.13195963E+05	-.49299031E+05	.24772363E+03
176310	.20408711E+05	-.52344751E+05	.18932989E+03
176311	.20507411E+05	-.52343631E+05	.18891238E+03
177310	.26499802E+05	-.52774696E+05	.17280866E+03
177311	.26704885E+05	-.52773620E+05	.17189417E+03
178310	.32415071E+05	-.52483096E+05	.15294347E+03
178311	.32445101E+05	-.52435745E+05	.15344082E+03

Adjusted coordinates of pass points.

180311	.45838350E+05	-.52733131E+05	.57817846E+02
180101	.43916631E+05	-.48610019E+05	.12893270E+03
181310	.51530326E+05	-.52925487E+05	.45498253E+02
181311	.51669247E+05	-.53007428E+05	.45434398E+02
182310	.58123976E+05	-.52407773E+05	.44976710E+02
182311	.58235375E+05	-.52114085E+05	.48272905E+02
183310	.64114016E+05	-.52414668E+05	-.68542828E+01
183311	.64185847E+05	-.52366752E+05	-.69674109E+01

CONTROL	DX	DY	DZ
1101	.71684441E-01	.25416650E-01	.75207858E-01
1102	-.16784161E-01	.15668366E-01	-.16486909E+01
4101	.35830948E-01	-.11698821E-01	.35085434E-01
5101	.40026516E-01	-.26776214E-01	-.23138456E-01
8101	.80959338E-01	.38107523E-01	.10416148E-01

Lack-of-fit to ground control data.

169101	-.22076432E-00	.69029222E-02	.30601414E+01
175101	-.92815439E-01	-.67316185E-01	-.13793118E+01
154101	-.10933582E-00	-.37708182E-01	.11061538E-00
180101	.35789079E-01	.81090373E-02	-.20778650E-00

IMAGE	X PLATE RESID	Y PLATE RESID
99099310	-.86569035E-07	-.22744429E-05
99099311	.17491427E-06	.45002217E-05
99099320	.37558820E-06	.22595100E-06
99099321	.14182775E-05	.19551884E-05
99099330	-.16405343E-05	-.34281343E-05
99099331	.31132291E-05	-.62266617E-05
99001310	.94010519E-07	-.24639551E-04

Residual errors of image coordinates

183149311	.55991853E-05	.73575736E-06
183150320	-.39896075E-05	.12782184E-05
183150321	-.43709170E-05	-.23489617E-05
183150330	.21285969E-05	.71917693E-06
183150331	.27854210E-05	.72452248E-06

RMS RESIDUAL FOR ENTIRE BLOCK = .81051694E-05

PLATE	OMEGA	PHI	KAPPA
99	.69643540E-02	.49102434E-02	.47928770E-01
99	.99997575E+00	.99998794E+00	-.99885076E+00
1	-.38821851E-02	.61692667E-02	.13457481E-00
1	.99999246E+00	.99998097E+00	-.99090344E+00
2	.55602136E-02	.31854531E-02	.61519393E-01
2	.99998454E+00	.99999493E+00	-.99810589E+00
3	-.32688502E-02	.46894204E-02	.53255453E-02
3	.99999466E+00	.99998900E+00	-.99998582E+00
180	.93361212E-02	.23335165E-01	.34854492E-01
180	.99995642E+00	.99972770E+00	.99939240E+00
181	-.20557653E-02	.14579742E-01	.73610465E-01
181	.99995789E+00	.99989371E+00	.99728707E+00
182	-.17578314E-02	.15464700E-01	.84529196E-01
182	.99999846E+00	.99988041E+00	.99642100E+00
183	-.49331499E-02	.23901553E-01	.14387802E-00
183	.99998783E+00	.99971432E+00	.98959543E+00

Sines and cosines of camera angles

PLATE	XO	YO	ZO
99	.62568705E+05	.16480487E+05	.62354595E+04
1	.57116755E+05	.16946241E+05	.62715004E+04
2	.50907132E+05	.17677132E+05	.63229243E+04
3	.44533354E+05	.17516069E+05	.63769976E+04

Coordinates of camera stations

173	.14918249E+04	-.45825172E+05	.64074736E+04
174	.79244558E+04	-.45885689E+05	.64013285E+04
175	.14258696E+05	-.45901526E+05	.63960020E+04
176	.20507938E+05	-.45942884E+05	.63702795E+04
177	.26776393E+05	-.45932031E+05	.63480221E+04
178	.32947274E+05	-.46046615E+05	.63152648E+04
179	.39167950E+05	-.46177786E+05	.62973363E+04
180	.45702742E+05	-.46219059E+05	.62238698E+04
181	.51165246E+05	-.46168033E+05	.61999917E+04
182	.57912236E+05	-.45792453E+05	.61475320E+04
183	.64107522E+05	-.45109329E+05	.60826968E+04

OBJECT POSITIONS COMPUTED BY INTERSECTION

OBJECT	X GROUND	Y GROUND	Z GROUND
1101	.56226100E+05	.21429569E+05	.20949178E+03

IMAGE	X PLATE RESID	Y PLATE RESID
9900 1101	-.51709872E-06	.52162677E-05
1001101	.15492526E-05	-.28466339E-05
2001101	-.76273512E-06	-.22161165E-05

125089101 EXCEEDS RESIDUAL LIMIT--DISCARDED

OBJECT	X GROUND	Y GROUND	Z GROUND
89101	.82573065E+04	-.21839684E+05	.43745552E+03

IMAGE	X PLATE RESID	Y PLATE RESID
89089101	-.73390236E-05	.42967062E-05
107089101	-.65645123E-05	.10051321E-05
108089101	.45251999E-05	.24001985E-05
127089101	.16910793E-05	.55849586E-06
126089101	.32926297E-05	-.18229477E-05

OBJECT	X GROUND	Y GROUND	Z GROUND
5101	.27453879E+05	.17511368E+05	.43096654E+03

IMAGE	X PLATE RESID	Y PLATE RESID
5005101	.78537364E-07	.18303562E-05
6005101	.10371170E-05	.75666761E-06
23005101	-.22772984E-05	.43859551E-05
24005101	.30853794E-05	.10765665E-05
25005101	.67015866E-07	-.30328965E-05

TOTAL NUMBER OF INTERSECTED OBJECTS IS 154

B L O C K A D J U S T M E N T C O M P L E T E D

References

1. Harris, W. D., Tewinkel, G. C., and Whitten, C. A., "Analytic Aerotriangulation," Technical Bulletin No. 21, U. S. ESSA, Coast and Geodetic Survey, July 1962, Rockville, Md. 20852.

   --- also in Photogrammetric Engineering, Vol. 28, No. 1, March 1962, pp. 44-68.

2. Keller, Morton and Tewinkel, G. C., "Aerotriangulation Strip Adjustment," Technical Bulletin No. 23, U. S. ESSA, Coast and Geodetic Survey, Aug. 1964, Rockville, Md. 20852.

3. --- "Aerotriangulation: Image Coordinate Refinement," Technical Bulletin No. 25, U. S. ESSA, Coast and Geodetic Survey, March 1965, Rockville, Md. 20852.

4. --- "Three-Photo Aerotriangulation," Technical Bulletin No. 29, U. S. ESSA, Coast and Geodetic Survey, Feb. 1966, Rockville, Md. 20852.

5. --- "Space Resection in Photogrammetry," Technical Report C&GS No. 32, U. S. ESSA, Coast and Geodetic Survey, Sept. 1966, Rockville, Md. 20852.

6. Schmid, Hellmut H., "An Improvement in Accuracy of the Orientation of a Photogrammetric Camera by Means of Condition Equations," Photogrammetric Engineering, Vol. 18, No. 5, 1952, pp. 835-383 (and numerous subsequent publications).

7. Keller, Morton, "Documented Computer Programs," Photogrammetric Engineering, Vol. 33, No. 5, Sept. 1965, pp. 892-895.

8. Davis, Ronald G., "Analytical Adjustment of Large Blocks," Photogrammetric Engineering, Vol. 32, No. 1, Jan. 1966, pp. 87-96.

9. Umbach, Melvin J., "Aerotriangulation: Transformation of Surveying and Mapping Coordinate Systems," preliminary report, U. S. ESSA, Coast and Geodetic Survey, June 1967, Rockville, Md. 20852.

☆ U. S. GOVERNMENT PRINTING OFFICE : 1967 O - 281-118

*No. 10. Vertical Adjustment of Instrument Aerotriangulation by Computational Methods. William B. Harris, September 1959 (Superseded by No. 23.) ..... 10¢

*No. 11. Use of Near-Earth Satellite Orbits for Geodetic Information. Paul D. Thomas, January 1960 ..... 45¢

*No. 12. Use of Artificial Satellites for Navigation and Oceanographic Surveys. Paul D. Thomas, July 1960 ..... 25¢

No. 13. A Singular Geodetic Survey. Lansing G. Simmons, September 1960 ..... 15¢

No. 14. Film Distortion Compensation for Photogrammetric Use. G. C. Tewinkel, September 1960 ..... 10¢

*No. 15. Transformation of Rectangular Space Coordinates. Erwin Schmid, December 1960 ..... 15¢

No. 16. Erosion and Sedimentation--Eastern Chesapeake Bay at the Choptank River. G. F. Jordan, January 1961 ..... 40¢

No. 17. On the Time Interval Between Two Consecutive Earthquakes. Tokuji Utsu, February 1962 ..... 10¢

No. 18. Submarine Physiography of the U.S. Continental Margins. G. F. Jordan, March 1962 ..... 20¢

No. 19. Analytic Absolute Orientation in Photogrammetry. G. C. Tewinkel, March 1962 ..... 20¢

No. 20. The Earth as Viewed from a Satellite. Erwin Schmid, April 1962 ..... 20¢

*No. 21. Analytic Aerotriangulation. W. D. Harris, G. C. Tewinkel, C. A. Whitten, July 1962 (Corrected July 1963) ..... 30¢

No. 22. Tidal Current Surveys by Photogrammetric Methods. Morton Keller, October 1963 ..... 20¢

No. 23. Aerotriangulation Strip Adjustment. M. Keller and G. C. Tewinkel, August 1964 ..... 30¢

*No. 24. Satellite Triangulation in the Coast and Geodetic Survey, February 1965 ..... 20¢

No. 25. Aerotriangulation: Image Coordinate Refinement. M. Keller and G. C. Tewinkel, March 1965 ..... 15¢

No. 26. Instrumented Telemetering Deep Sea Buoys. H. W. Straub, J. M. Arthaber, A. L. Copeland, and D. T. Theodore, June 1965 ..... 25¢

*No. 27. Survey of the Boundary Between Arizona and California. Lansing G. Simmons, August 1965 ..... 55¢

No. 28. Marine Geology of the Northeastern Gulf of Maine. R. J. Malloy and R. N. Harbison, February 1966 ..... $1.25

No. 29. Three-Photo Aerotriangulation. M. Keller and G. C. Tewinkel, February 1966 ..... 35¢

No. 30. Cable Length Determinations for Deep-Sea Oceanographic Operations. Capt. Robert C. Darling, June 1966 ..... 10¢

No. 31. The Automatic Standard Magnetic Observatory. L. R. Alldredge and I. Saldukas, June 1966 ..... 25¢

ESSA TECHNICAL REPORTS--C&GS

No. 32. Space Resection in Photogrammetry. M. Keller and G. C. Tewinkel, September 1966 ..... (*)

No. 33. The Tsunami of March 28, 1964, as Recorded at Tide Stations. M. G. Spaeth and S. C. Berkman, July 1967 ..... 50¢

No. 34. Aerotriangulation: Transformation of Surveying and Mapping Coordinate Systems. Lt. Cdr. Melvin J. Umbach, July 1967 ..... (*)

---

* Price not determined