LE COPY

GEODETIC LETTER

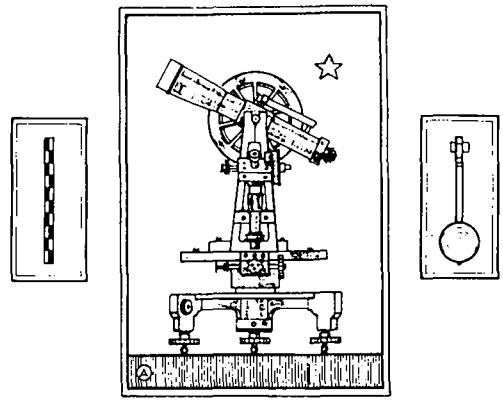

No. 3
Vol. 2

MARCH
1935

ISSUED BY

DIVISION • OF • GEODESY
UNITED · STATES · COAST · AND · GEODETIC · SURVEY ·
WASHINGTON D.C.

R.S. PATTON · Director

M-115

U. S. Coast and Geodetic Survey
DIVISION OF GEODESY

G E O D E T I C   L E T T E R

Volume 2 | MARCH, 1935 | Number 3

C O N T E N T S

Iowa guard posts for the local control survey monuments.
Protection of bench marks and triangulation points in New Jersey.
A proving or testing ground for geodetic instruments and theories.
Employment on the local control survey project.
It pays to be courteous and helpful.
Locations for bench marks.
Accurate centering of instruments at triangulation stations.
Triangulation helps to recover property boundaries.
More care required in setting station marks.
Determination of variation between thermometer and actual tape temperature.
Plan for state bureau of surveys for New Jersey.
Recommendations regarding Bilby steel towers.
Reconnaissance data from viewpoint of building party.
Special report on triangulation in Montana and the Dakotas.
Lines for Laplace azimuth.
Chaining tripods.
Federal surveying in Oregon.
Recovery of and stamping of elevations on bench marks.
Technical procedure for city surveys.
The need for maps.
Use of geodetic control in locating property boundaries.
Notice.
Report of Progress.

IOWA GUARD-POSTS FOR THE LOCAL CONTROL-SURVEY MONUMENTS

By J. S. Dodds
State Representative

One of the features of the Iowa system of local control surveys is the method of guarding monuments.

White guard-posts about 6 inches in diameter and projecting about 2 feet above ground are set nearby, so the monument can be found readily regardless of vegetation or snow.

The post is branded "U. S. B. M." with a gasoline-torch branding-iron on the face toward the highway and on the face toward the monument. The post keeps the road maintainance machinery from damaging the monument by acting as a guard.

The posts, furnished gratis upon orders of Mr. W. H. Root, Chief of Maintainance, Iowa State Highway Commission, have been painted white and set as relief projects in the various counties by county road forces and district highway maintainance forces.

The local engineers are waiting eagerly for final positions and elevations. The presence of the posts excites many questions from persons who may be prospects for surveys which can be tied in to these monuments.

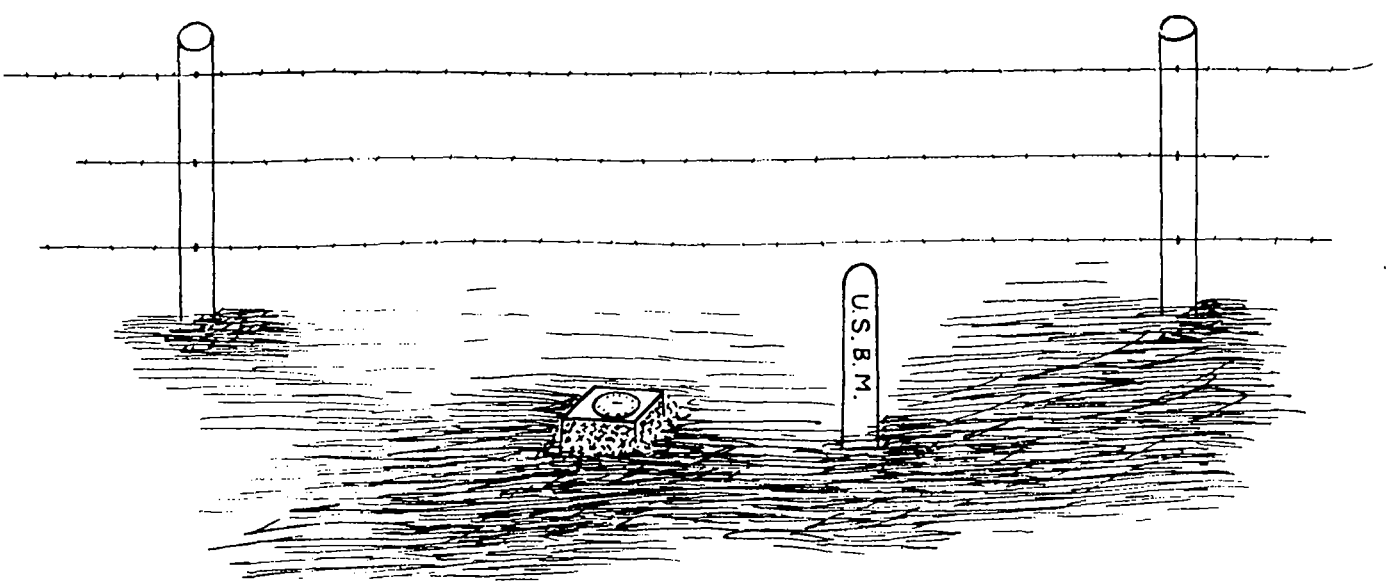

-=0=-

PROTECTION OF BENCH MARKS AND TRIANGULATION POINTS IN NEW JERSEY

By Philip Kissam
State Representative

There are located in New Jersey several thousand U. S. Coast and Geodetic Survey points for horizontal and vertical control. The value of this large number of accurately located marks is enhanced in certain areas by the short distances between these points. Unfortunately, experience has indicated that every year a certain number of them are destroyed, either by natural causes or vandalism, but nore frequently by construction work.

Incidents of this nature have been reported to the Office by members of the New Jersey Local Control Survey. Along the old transcontinental level line, which follows the New Jersey Central Railroad right-of-way from Bound Brook to Phillipsburg, some 6 bench marks were destroyed when bridge abutments were altered. Concrete was poured over the marks, rendering them inaccessible. Triangulation station "Weasel", presumably safe on a hill top, was blasted out in quarrying operations. It seems unnecessary that this sort of thing should occur, particularly when engineers who know the value of these markers are in charge of the work.

Any person who becomes aware that a point is in danger of being destroyed has only to notify the Coast and Geodetic Survey direct, or through the Local Control Survey, in order to do a considerable public service.

During the past year information from various sources came to the New Jersey Local Control Survey that 40 points were in danger of destruction. Upon investigation it was found advisable to relocate 24 of them. The New Jersey State Highway Department has been particularly helpful in lending their cooperation. Triangulation station "Club", a second-order station set for the control of the survey of Shark River, in Monmouth County, is in a position where regrading is necessary for the construction of the approach to the new Shark River Bridge on Route 35. On the plans prepared for this work by the Highway Department this point, together with 5 other Coast Survey monuments, are indicated with the following notations:

"Ties to U. S. Coast and Geodetic Survey triangulation station 'Club'. Not to be disturbed until ordered by the engineer. Special care to be taken to protect them."

"U. S. Coast and Geodetic Survey monuments to be protected."

The plan was forwarded to the Local Control Survey Office, with the request that suggestions be offered as to the procedure to be followed for maintaining these points.

Bench mark "Q-15, 1933", in Warren County, was located on a highway bridge which was about to be torn down. When the condition was reported by the field chief in the area, the Highway Department cooperated in the transfer of the bench mark.

County authorities have also aided in salvaging points by lending county trucks and supplying material for new marks. Reference mark No. 1 at triangulation station "Acton 2", in Salem County, is located directly in the center of a proposed county highway, at an elevation of 9/10 of a foot above the proposed finished grade. Upon learning of this monument, the County Engineer, Mr. W. W. Summerill, furnished plans showing the new highway, and aided in the selection of a location clear of the work.

The Erie Railroad only a short time ago reported that "RV-83" and RV-84", at Ramsey, Bergen County, were located on signal boxes that were to be removed. Both bench marks will be transferred.

"G-3", a bench mark set at the old City Hall in Camden, was in danger of being lost when the building was torn down. The contractor reported it, carefully protected the bench mark, and the Survey transferred it to another location. Very probably the old bench mark will be again serviceable, due to the careful protection it received.

A section of the Reading Railroad between Hammonton and Pleasantville, and a section of the Pennsylvania Railroad between Pleasantville and Cape May, were to be abandoned and torn up. Along these railroads runs a precise line of U. S. Coast and Geodetic levels, with 29 bench marks in danger of destruction. The superintendents of the railroads involved cooperated in every way to avoid the loss of these bench marks. Investigation disclosed that 13 were safe as located, and 14 were reset. Three of the original bench marks were already destroyed. Only 2 were lost, but both by accident previous to the abandonment of the line.

Such cooperation is extremely gratifying. It is believed that if the great public value of the points

becomes widespread knowledge, and that if it is realized throughout the State that a telephone call is all that is necessary to prevent their loss, little or no damage will be done these points by construction operations.

-=0=

A PROVING OR TESTING GROUND FOR GEODETIC INSTRUMENTS AND THEORIES

By C. A. Whitten

If a person is a careful reader of advertisements, he will find that many articles manufactured at the present time are thoroughly proved and tested before being offered for sale to the public. Manufacturers of automobiles have thousands of acres of land and a skilled personnel devoted to such a program.

Would such a plan be practical for the Survey? The Washington Office has taken the first step by setting aside one room of the Instrument Division for the testing of theodolites. Any test made in that room is made under ideal conditions. Many flaws in workmanship can be and are detected in this way. The next logical step in this testing program would be to subject the instrument to a test under conditions similar to those found in the field. An actual field test by a field party is not practical because the expense of the entire party is chargeable to the test. The Survey has some property at Gaithersburg, Md., (the writer does not know how much.) At this place, or a similar place located conveniently to Washington, a proving or testing ground could be established for the testing of geodetic instruments and the development of new theories. There are many problems which are not completely solved, as, for examples, tower design and construction, personal equation of the observer, refraction, or night error. There are sufficient problems to keep a skilled personnel constantly at work.

This is merely a suggestion of a plan which the writer considers highly feasible. Perhaps men of more experience with the Survey have better plans. The Geodetic Letter seems to me to be a fine place to voice them.

-=0=-

EMPLOYMENT ON THE LOCAL CONTROL SURVEY PROJECT

The Local Control Survey Project had its inception during the late Fall of 1933 under the direction of the Coast and Geodetic Survey as a part of the Civil Works Administration program. One of the primary objects of these surveys was the employment of idle engineers and other professional men.

At the time the jurisdiction of this project was removed from the Coast and Geodetic Survey, 10,800 employees were on the payroll. No definite statistics were available regarding the status of the employees up to that time, but fragmentary information received from a number of states shows between 70% and 80% of the personnel were graduate and professional engineers or men of college training.

When the project was taken over by the State Civil Works Administration the forces were considerably reduced in most states. After March 31, 1934, the project was continued in about 22 states as a part of the State Emergency Relief Administration program. Conditions of employment vary in these states. In some the employees are subject to budgetary requirements and are permitted to work only a sufficient number of hours to provide for the bare living expenses of themselves and families. In other states, more satisfactory conditions prevail and the technical personnel are permitted to work from 30 to 35 hours per week with a salary commensurate with the duties performed. There is given below an analysis of the qualifications of the personnel employed on this project as of January 1, 1935. There were 2907 men employed in 23 states as of that date. Twenty eight percent were graduates of engineering colleges or professional engineers of several years standing and 27% had some engineering college education. Included in this classification are those engineering students at present being financed by the State Emergency Relief Administration and required to perform work under the engineering authorities of the colleges they are attending. Thirteen percent have attended other than engineering colleges. Included in this classification are graduates having arts degrees and men who have been compelled to drop their college training (other than in engineering) due to lack of funds. Thirty two percent have had no special training along professional lines. Included in this classification are those employed as laborers.

This analysis shows that 68% of those at present employed are men who had some college training. These statistics show that the project even under the restrictions imposed by the present set-up of the Emergency Relief Administration is benefiting men of professional standing.

The statistical table follows:

	Graduate and Professional Engineers	Some Engineering Education	Attended Other Than Engineering College	Not Engineers, Surveyors, or College Men	Totals
Alabama	48	99	60	22	229
Arkansas	0	5	7	19	31
Colorado	16	28	24	12	80
Connecticut	19	19	4	20	62
Florida	39	35	19	63	156
Georgia	102	60	20	36	227
Idaho	42	16	6	13	77
Iowa	11	9	0	4	24
Louisiana	28	22	12	98	160
Maine	20	5	3	10	38
Maryland	5	0	0	2	7
Massachusetts	77	101	17	50	245
Michigan	29	15	4	31	79
New Hampshire	23	4	4	4	35
New Jersey	205	163	32	59	459
North Carolina	33	18	11	91	153
Oklahoma	43	54	56	103	256
Oregon	6	14	2	29	51
South Carolina	47	24	52	129	252
Tennessee	25	50	25	75	175
Texas	5	7	5	55	72
Virginia	6	6	7	14	33
Wisconsin	0	6	0	0	6
TOTALS	829	769	370	939	2907
Percent	28%	27%	13%	32%	

-=0=-

IT PAYS TO BE COURTEOUS AND HELPFUL

The following letter, dated January 18, 1935, was sent to the Director by Mr. J. T. Meek, Director of the Mercantile Division of the Illinois Chamber of Commerce:

"This letter is a direct effort to commend two members of the Geodetic Survey for their courtesy of the night of January 11.

"On that evening Mr. Joseph Spiess, a prominent Elgin merchant and myself, were returning from Springfield, Illinois, and experienced some tire trouble which we were unable to correct ourselves. We hailed a passing truck which stopped immediately. The two gentlemen who were riding in the truck got out and solved our problem. Instead of going on and leaving us to finish the job of changing tires, these two men insisted upon making the complete change for us and in ship-shape manner. They would accept no recompense of any kind and made their refusal in such a courteous way that we felt bound to report their very commendable actions to you.

"The two men were Gerald B. Siler and Gene Livingston of the Geodetic Survey, bound for Columbia, Missouri, but of the Memphis, Missouri, branch.

"If it is within your province to do so, I hope you will see fit to personally commend these gentlemen for their actions. Your records may also provide us with the names of the immediate commanding officers of these men and with the names of their parents. We should like to transmit our thanks to these parties as well."

While the action of Messrs. Siler and Livingston has been called to the attention of the Washington Office of the Coast Survey yet we believe that our entire personnel engaged on geodetic surveying is imbued with this same spirit of courtesy and helpfulness as were these two members of the Division of Geodesy. It is certain that courtesy shown on the road by the members of our geodetic parties will be appreciated by all travelers and will tend to increase the respect for our personnel and our work on the part of the citizens of our states.

-=0=-

LOCATIONS FOR BENCH MARKS

The chief of a leveling party is always confronted with the problem where to set bench marks that they may have long life. Along railroads and improved highways the problem is not particularly difficult. It is reasonably certain that the improved highways and railroads will not be widened, although occasionally they are straightened. If the bench marks are set on the outside of a curve on either a highway or railroad, later improvement should not destroy it.

When it comes to the unimproved roads the matter is quite different. There we shall see in the next decade or two a lot of changes. The roads will be widened, surfaced and straightened. This leads to the thought that the setting of bench marks along such roads should be carefully studied. A few suggestions are given here with a view to having this subject considered by the readers of the Geodetic Letter. It is hoped that anyone who may have definite ideas will send them to the Editor.

In general, bench marks should be established near some topographic feature that will have some permanency. A cross road is such a feature and even the junction of a public road and a farm road is quite permanent. The crossing of a road and a stream is also something that will remain indefinitely. If a bench mark is to be set near the intersection of two roads, it should not be close to the intersection. In the improving of highways, curves of large radius are used in turning from one road to another. If a bench mark is set in the corner of the field at an intersection it is liable to be destroyed when the improvment occurs. It is probable that farm roads will never be greatly widened or straightened and therefore it would seem to be reasonable that a mark set on the side of a farm road from 20 to 40 yards away from the public road would not be destroyed by road improvement. Bench marks should not be set along the lateral roads on the inside of a curve for straightening the road would be almost certain to interfere with the mark.

Property lines are excellent locations for bench marks. If there is a well defined division line between two farms, a bench mark set in that line would probably have permanency.

A bench mark can be established on the lawn of a farmhouse close to the road. In general, the owner of the

property is glad to have such a monument established on his land, provided of course, that it is put in a place where it will not be a danger to anyone walking around. School yards are especially good places for locating bench marks. They will be seen by the scholars and teachers and their locations will be well known to the community.

-=0=-

ACCURATE CENTERING OF INSTRUMENTS AT TRIANGULATION STATIONS

Where triangle sights are 10 or more miles in length, an error in centering the lamps and theodolites of as much as one centimeter would have no appreciable effect on the closing error of the triangles. We must remember however that at each triangulation station we are determining the azimuth between the station and the monument that is set at a distance of 400 or 500 meters. The azimuth of the lines between these 2 monuments will be used in making local surveys and for running traverses to supplement the fundamental triangulation net. For a distance of 400 meters an error in centering the theodolite of 5 millimeters might cause an error in the line to the azimuth mark of 2.6 seconds. This is about the limit in error that can be tolerated. In view of the above, it can be readily seen that the theodolite should be centered at each station with extreme accuracy. It is believed that with care the error in centering should not be more than 1 or 2 millimeters even for a tower 103 feet in height. If on a triangulation party where towers are used there are not enough vertical collimators, the observing party should use the collimators and the building parties should use the transits for centering.

-=0=-

TRIANGULATION HELPS TO RECOVER PROPERTY BOUNDARIES

Many requests are coming to the Washington Office for triangulation data to be used in property surveys. This is most encouraging for the officials of the Coast and Geodetic Survey have realized for many years that eventually property owners would want their boundary surveys tied into triangulation stations. When this has been done, a geographic description of the boundary is made. By having the longitudes and latitudes of the boundary corners or, what is just as effective, the plane coordinates, based on geographic positions, of those corners, the boundary can be recovered at any time in the future.

A long step forward was made when plane-coordinate systems for the 48 states were devised by Dr. O. S. Adams, mathematician of this Bureau. By using plane coordinates the engineer engaged on local work is not bothered by the rather intricate computations involved in computing the latitudes and longitudes for his traverses. The ordinary method of latitude and departure can now be used.

As rapidly as practicable the plane coordinates are being computed for the adjusted triangulation stations. This work is well advanced and at present there are thirty or forty computers engaged on plane-coordinate work. In publishing the results of triangulation for a state, the report will contain the plane coordinates as well as latitudes and longitudes for the stations.

A manuscript has been prepared and sent to the Public Printer which describes in detail the computation of plane coordinates on the Lambert Systems, which are used in many of the states. That publication can be purchased at a small cost, when it is available, from the Superintendent of Documents, Washington, D. C.

Any community in which a triangulation station is established is very fortunate. There will be many wide areas even when the triangulation net is completed with the 25-mile spacing, which will be quite far from a triangulation station. These areas will eventually, no doubt, be covered by lines of traverse which will be rigidly adjusted to the triangulation stations. Eventually the traverses should be made along the principal highways and many of the subsidiary roads of the highway system. The monuments should be set on the traverses at intervals of about a mile in order that each property owner along the route will have available, by a short traverse, a fundamental station as the starting point for his boundary surveys. Many survey stations are destroyed by forces of nature and the actions of man. Some of the destruction is inevitable but by placing the stations in secure positions and by educating our citizens as to the value of survey monuments, the chances are that the mortality of stations will be far less in the years to come than they have been in the past.

-=0=-

MORE CARE REQUIRED IN SETTING STATION MARKS

A communication to this Office dated December 24, 1934, from Mr. Harold Wm. Merritt, civil engineer of Twin Falls, Idaho, contains the following statement:

"On December 10th, 1934, members of the Twin Falls party of the State Geodetic Survey, while occupying Kimama Station, discovered the bronze marker lying on top of the rock near the point. Six inches of snow covered the butte at the time but the men had no difficulty in locating the exact point from which the tablet had been removed, as particles of cement still remained in the crack in the lava rock. Neat cement had been used and adhesion to both the rock and marker was poor. Removal of the marker was evidently easy and not the work of souvenir hunters. The point was referenced out by the party and the tablet will be replaced when weather permits."

It is quite evident that the tablet was cemented into the rock with poor material or that the temperature at the time of the setting was below freezing. Personnel on triangulation and leveling engaged in marking stations should be very careful in their work. If the tablet is set into dry rock this would cause a drying out of the cement that is in contact with the rock and the cement in consequence would not set. There is an old saying that a good brick layer will wet his bricks before laying them. It is equally important that the rock or stone into which a tablet is set, should be wet before the cement is poured.

-=0=-

DETERMINATION OF VARIATION BETWEEN THERMOMETER AND ACTUAL TAPE TEMPERATURE

The following report of tests to determine the variation between thermometer and actual tape temperatures was submitted by Mr. Philip Kissam, State Representative of New Jersey:

Purpose.

The purpose of the investigation was to determine:

1. Variation, if any, between actual tape temperatures and air temperatures.

2. The proper position for the tape thermometer, in order to most nearly record the actual tape temperature.

Equipment.

Three standard tape thermometers were selected which gave approximately the same readings over the required temperature range. A correction of one degree was found necessary for two of the thermometers over part of this range. As the absolute temperatures were not important, no further standardization was thought necessary.

A 100-ft. base line was established, consisting of two measuring posts of 4" by 4" fir, 5 feet long, set 3 feet in the ground in concrete and extending 2 feet above the ground. To the top of each post was nailed a strip of copper, one strip marked with a single scratch and the other with a scale graduated at intervals of .002 of a foot. Set behind each measuring post was a holding post to which the tape and spring balance could be attached by means of turn buckles.

The location of the base line was so chosen that it was entirely in the sun in the morning and entirely in the shade in the afternoon.

Method.

Each tape was placed on the base line when in the shade. The air temperature was determined and the scale reading at the end of the tape was read. The scale reading for 68° F. was then computed by correcting for temperature according to the above-mentioned thermometer reading. Each tape was placed on the base line in the sun and from its length as indicated by the scale reading, the actual temperature of the tape was computed. Thermometers were variously placed to discover which thermometer would most nearly record this actual tape temperature.

Results.

It was discovered that no location of the thermometer could be found which caused it to read a higher temperature than the actual tape temperature. The nearest approach to the tape temperature was recorded by a thermometer attached to the tape so that the metal case of the thermometer was in contact with the tape, and the case of the thermometer painted a dull black.

Next in order was the unpainted thermometer attached to the tape. The thermometer in the sun did not record as high a temperature as that on the tape and the thermometer in the shade recorded a much lower temperature.

The shade thermometer recorded at times from 12° to 18° F. below the actual tape temperature.

Conclusions.

The above results appear to indicate that over a range from 50° F. to 80° F. the best location for a thermometer used to determine tape temperatures is attached to the tape with the metal of the thermometer in contact with the metal of the tape, and with the case of the thermometer painted a dull black.

- - -

Editor's Note:

The Coast and Geodetic Survey found many years ago that it could not get good results with steel tapes on base measurements by daylight taping due to the low coefficient of expansion of invar. This difficulty does not occur with invar tapes and it is recommended that engineers wishing to make accurate traverses use such tapes. Second-order accuracy however can be obtained by careful taping with standardized steel tapes corrected for temperature change.

-=0=-

PLAN FOR STATE BUREAU OF SURVEYS FOR NEW JERSEY

The following abstract of a letter from Professor Philip Kissam, State Representative of New Jersey to Professor J. S. Dodds, State Representative of Iowa outlines a proposed plan for a State Bureau of Surveys.

"I had thought of asking the New Jersey State Legislature to establish a State Commission of Surveys, to consist, ex-officio and without pay, of the heads of the various State Agencies which make Surveys, viz: The Director of the Bureau of Commerce and Navigation, the State Highway Engineer, and the State Geologist. Major Bowie suggested that to this should be added the County Engineers as associate members, who should meet with the other members at an annual dinner.

"Under this commission should be appointed a Director, possessing the necessary technical knowledge and possibly connected with the U. S. Coast and Geodetic Survey, and paid a retaining fee. The Director should be supplied with an office for records, and with a principal assistant on a full time basis. Under the principal assistant should be a stenographer and a complete field surveying party equipped with truck and instruments. The annual cost of such a set up would be, I believe, in the neighborhood of $14,000.

"The duties of the Commission should of course be to collect and disseminate surveying data. To this end the Commission should acquire copies of all data available from the U. S. Coast and Geodetic Survey, particularly the geographic positions and descriptions of horizontal control points and elevations and descriptions of bench marks.

"The grid coordinates or elevations of these points, together with those of the Local Control Survey, should be compiled on tracings ready for immediate distribution as blue prints. This data should be given out as official information from the U. S. Coast and Geodetic Survey.

"New Jersey has a very large number of points and bench marks set by the old New Jersey Geological Survey. It would be the duty of the Commission to make these points available by computing the plane coordinates of the points and establishing contours of correction for the bench marks. This data could be called official State information. (All, of course, would be on the same datum.)

"A third source of information comes from State and County highway surveys and the many other surveys made within the State. It would be the duty of the Commission to insist when possible, and request where necessary that, in return for information supplied, monuments be set and proper descriptions made of points on these surveys normally marked with stake and tack. Files should be kept of these points together with their adjusted coordinates and elevations.

"The Field party should be chiefly a maintenance party, as the maintenance of marks is vital. Recovery of the points should be systematized. The field party could be ready to add to the system or assist in ties for other surveys. They could also handle the necessary computation and drafting.

"Coordinated points, like telephones, are useless unless the other fellow uses them. It should be the duty of the Commission to take every means available to inform the profession of the existance of these points and the localities where they are to be found. Maps should be prepared to this end. The County engineers should be automatically supplied with the data in their County for use by local engineers. City engineers should be supplied with data upon request and without cost.

"I believe that elevations and coordinates alone are a strong enough argument for the establishment of such a

commission. Once established I think that a Library of Maps and Charts should be compiled. These should be referenced by locality and handled like a library. All maps made in the State, for example highway plans would be included.

"In conclusion I might liken a bureau of this kind to the automobile. The only way we could get along without it is never to have had it."

-=0=-

RECOMMENDATIONS REGARDING BILBY STEEL TOWERS

By Walter J. Bilby, Signalman

I heartily agree with Lieut. John Bowie, Jr. and Signalman M. Z. Braden, (Geodetic Letter, No. 11, Vol. 1) that something must be done about our present towers. I have tested steel towers from the beginning of their use in geodetic work and have given eight years constant thought on the subject. My findings are that the 1927 model is the best tower we have ever had. Those are the towers with U-206 and U-207 corner posts in the seventy-seven-foot section; U-204 and U-205 corner posts in all the sections above the seventy-seven-foot section. Of course I would continue to use the open-angle corner post on top and not return to the old solid corner post there. I would then use the U-285 and U-286 corner posts in the outer tower in the ninety-foot section. For the inner tower I would use U-207 and U-206 corner posts. This bears out Mr. Braden's idea of the lighter steel toward the top and the heavier steel toward the bases of the taller towers, with reduction in the thickness of the steel, but making the angle of the steel wider. This gives more strength and lighter weight at the same time.

I would like to make a few suggestions for points to watch for in building steel towers. I find that a new builder is inclined to tighten a bolt too tight. The threads will not strip nor will the bolt break, the bolt will stretch, thereby weakening the bolt. This is of course, a weak point in the tower. An old builder is inclined to put three quarter-inch bolts through the heavy corner posts. This bolt will hold but a full nut grip cannot be obtained without stretching the bolt. Then when heavy strains come on the tower this bolt will either break or will strip the threads. Too often old bolts are used in building because the builders did not take enough new ones

along that day. This does not mean that bolts should be used only once, but that, as the builders sort their bolts each day, every bolt should be inspected and thrown away if found to be faulty. It would be much better for the builders to return to camp for more bolts and build the tower right than to go ahead and build it so it would not be perfectly safe. Another point to watch is the riveting in the foot of the anchors. Quite often these rivets work loose and are not noticed. These are very common faults with building and I believe every old steel man will agree with me on this subject.

The weaker points in our towers are not the horizontal ties or diagonal braces but the corner posts alone. Every tower that has failed, where the anchors have held fast, has always buckled a corner post in exactly the same place - between the horizontal ties and between the first and second sections from the ground. In the majority of cases in the second section only.

While considering the subject of strengthening our towers we must consider the problem of weight due to transportation facilities. We must not increase the weight of the entire tower but should take the weight off the top of the tower, put it on the bottom of the tower and leave the general design of the tower as it now is.

-=0=-

RECONNAISSANCE DATA FROM THE VIEWPOINT OF BUILDING PARTY

By Walter J. Bilby, Signalman

I wish to take this opportunity to give the viewpoint of the building party in regard to reconnaissance data as suggested by Mr. Mussetter's article in Geodetic Letter No. 11.

Since triangulation parties have expanded to such a great extent, it is necessary for the person in charge of building to be able to draw a mental picture of each individual station from the descriptions furnished by the reconnaissance men. This can usually be done but in a few cases the descriptions are lacking in detail for a complete picture. For instance, I would like a description to read, "turn right (north) on gravel road, (or graded road, dirt road, etc.)" This at once tells a person what to expect of the road under any weather condition. It identifies the road to a fuller extent so that the newer inexperienced man will have less trouble in finding the station. Also a note at the beginning of the description noting any correction to speedometer readings will be of great help.

It would greatly assist the steel haulers and building foremen if the stations were marked with a definite point for the station. These points may be marked in a number of ways, any of which would put little extra work on the reconnaissance man; such as a stake, a triangular trench in the ground, a triangular blaze cut upon a nearby tree or fence post. Also the distances to nearby permanent objects should be accurately paced, instead of estimated, as no two persons will estimate two distances the same.

It would be an added advantage if the reconnaissance men would note points for the reference marks and the azimuth mark. Usually the reconnaissance men have had experience building signals and setting marks. Therefore, they are able to select better locations in regard to the permanence and general utility of the marks, than most of the present building foreman. It is only natural for building foremen to select points that are accessible with trucks rather than with thought to the general usefulness of the mark.

It is also suggested that the reconnaissance man makes mention in his description of any agreement or concession made with the property owner. This includes data regarding the station mark, whether it is to be surface, flush, or subsurface. He might also mention whether there would be any possible property damage at that particular station.

I have always practiced putting the station in exactly the spot called for and building the height of steel called for. Recently I have not built less than 64-foot towers as we find they are much more solid, and are easier to build than even the 37-foot tower. A 37 or 50-foot tower is never built unless the station is in a very inaccessible place and the steel has to be packed in to the station site. It might be of help to the reconnaissance man if he would specify a 64-foot tower instead of checking his lines so closely, especially in the open prairie lands. In view of this I believe that a blue print should only call for 4-foot stands and from there jump to the 64-foot towers when steel towers are used by the triangulation party assigned to the project.

Another item in regard to the taller towers -- a 77-foot tower may be hauled on a single truck, while all over 77 feet should be hauled upon two trucks. For the shorter towers a 77-foot tower is always hauled regardless of whether the tower to be built is a 37, 50, 64 or 77-foot one. The 90-foot section should be eliminated if possible as it requires two trucks to haul it. For the occasional few 90-foot towers that have to be used the double haul will not disrupt the organization of the party. However, when all the towers

have to be of that height the party is organized for the double hauls.

For the actual building of the tower there is very little more work on the taller towers as it has been estimated that about four-fifths of the work is on the ground regardless of whether the tower is a 37-foot or 103-foot tower. Of course for the 116-foot towers it requires an additional man on the building parties as well as the tearing-down parties.

It has been the general practice on this party to ship or set aside the extra steel for the taller towers so the steel-haulers do not have to load and unload the extra amount of steel at every station and as the load on the steel truck is smaller it decreases the cost of hauling.

-=0=-

SPECIAL REPORT ON TRIANGULATION IN MONTANA AND THE DAKOTAS

By Wilbur R. Porter
Jr. H. & G. Engineer

The purpose of this report is to indicate the difficulties encountered in obtaining side and angle closures in the drought area of Montana and the Dakotas; to show the methods used; and, if possible, to determine the cause.

A complete tabulation of weather conditions was maintained, and a constant study was made by John E. Backman, Surveyor in charge of the field work of this party. The data for this report was taken from Mr. Backman's field notes.

Every effort was made to eliminate personal errors. All observing parties and lightkeepers were frequently visited by the Chief of Party so that it was found that the observations were carefully made and the lights accurately pointed at all times.

It is believed that the reasons for all the trouble encountered may be attributed to two factors -- topography and weather conditions. No particular instrument or party was repeatedly involved in the quadrilaterals which caused trouble. It is true that two of the theodolites, Nos. 355 and 361, are more sensitive to temperature changes than Nos. 314 and 362, but it is not believed that this fact was responsible for any of the high closures. This party encountered similar results when using other instruments in parts of Texas and New Mexico.

The arc from Buffalo, Wyo., to Richland, Mont., was through hilly, rough, arid country. The stations, as a rule, were located on high points of divides between dry creeks and coulees. Quite often there were as many as three or four high ridges between two stations. The general weather conditions throughout this arc were clear, hot windy days with somewhat calmer and cooler nights. The air was constantly filled with very fine dust caused by frequent sand storms. Often the lights, as seen through the instrument telescope, appeared as large red balls whose diameters were nearly twice the distance between the vertical cross-hairs and when the wind was blowing, they appeared as red flags fluttering in the breeze. This condition was still existant even after the lightkeepers had dimmed their lights to a minimum.

As indicated in my monthly journals for July and August, it was necessary to reobserve for high closures nearly every night. One closure of 15 seconds was obtained from results of the first run. Five to seven-second closures were not unusual and as high as a ten-second change was obtained upon reobserving the same evening. However, in many instances, it was necessary to make two to four runs on one or two lines before a value could be obtained which would give proper closures. For this reason it was necessary to reoccupy 22 stations between the Yellowstone River and the Canadian Border to obtain closures of 3-1/2" on R_1 triangles and 4" on R_2 triangles.

Side checks also added to the difficulties. Frequently closures of over 5" would give very good side checks while closures under 3" in the same figure would produce poor checks. This made it a necessity to keep triangle computations up to date in order to avoid as much reoccupation as possible. It was necessary to compute triangles before leaving the stations on many nights, but this was done only when experience had taught that trouble might be expected.

On the arc extending south from the vicinity of Val Marie, Sask., Canada, to Lodgegrass, Mont., much adverse weather was encountered. The temperature exceeded 100° F. nearly every day. Wind storms were almost a daily occurrence, so the air was constantly filled with dust. Smoke from the large forest fires in Western Montana and Idaho caused a constant haze. The topographic features were similar to those described for the previous arc.

Out of a total of 58 stations occupied it was found necessary to reoccupy nine stations for closures and one station for side checks. Incidentally, it was necessary to reobserve each night on some lines in order to obtain

closures within the allowable limits. If the triangles had closed with the results obtained from one run at each station the total number of directions necessary to complete this arc would have been 219. The actual number of directions observed was 381, or 74% more than the apparent number. Of this, 21.4% were second runs on front lights, and 52.6% were directions reobserved in an effort to obtain allowable closures. * * *

-=0=-

LINES FOR LAPLACE AZIMUTH

In selecting lines for use by the astronomical party for Laplace azimuth observations, the triangulation party should not only make sure that only a small amount of building will be required to make the stations intervisible after the steel towers have been removed but it should also use care in avoiding lines which may have excessive refraction from the lower stands.

One of the recent azimuth determinations by the astronomical party seems to be somewhat affected by refraction trouble. The chief of party gave the following explanation of the variable results:

"The line of sight to the Laplace Azimuth Mark is only a little over a mile in length. It passes over a corner of a roof of a house. The clearance is about four to six feet (estimated). The house is located about midway between the two marks. The line of sight to Polaris is over the roof of a church near the station (see description). The line passes to the right of the steeple and over the ridge of the roof, perpendicular to the ridge. The clearance to the right of the steeple is about 12 feet and clearance of the ridge of the roof about 10 feet.

"The azimuth observations made on two nights show a decided change due to refraction we believe. The change occurs between the hours of 8 and 9 p.m., E.S.T. Means of the results for each night grouped by hours indicate this result."

-=0=-

CHAINING TRIPODS

By N. E. Wolfard
State Representative, Okla.

On the initiation of Local Control Surveys as a "Relief Measure" one of our difficulties was the improvising of a

satisfactory tripod for horizontal measurements. We tried various designs of wooden tripods with varying degrees of success. All designs lacked stability and were also affected by weather conditions.

Toward the latter part of the period some bright minds evolved a design similar to the one shown in the sketch. This type proved so satisfactory that materials were purchased to make up thirty-two tripods of this design.

We are using four tripods with each measurement unit, this allows two tripods to remain in position, so that should the rear tripod be accidentally disturbed during the station measurement, the back station could be rechecked and hence save the measurements thus far made on the given section.

Following is a description and bill of materials for one tripod:

The table top consists of a piece of 2" by 6" hard pine 8" long. This is cut to a 5" width so that a standard 6" nipple may be used. On this top a piece of wall board 3" by 8" is nailed, its purpose being to provide a soft surface in which to stick the marking pins.

The frame work consists of 1/2" iron pipe and fittings. One one side two street ells are screwed into a tee which holds the leg. Six-inch nipples are screwed into the other end of the ells and inserted through holes in the side of the table top. Ells screwed onto the ends of the nipples on the other side of the table provide fittings for the other two legs.

The legs are 1/2" black iron pipe 36" long from end of ell to point. (Overall length including threads 36-1/2" to 36-3/4"). The end is pointed by a blacksmith, it being unnecessary to insert a solid iron point welded in.

The necessary materials for one tripod are:

1 - 2" x 6" x 8" Hard Pine.
1 - 3" x 8" Wall board or masonite.
9'3" of 1/2" Black Pipe.
2 - 1/2" x 6" Black pipe nipples.
2 - 1/2" Black street ells.
2 - 1/2" Black ells.
1 - 1/2" Black tee.

-=0=-

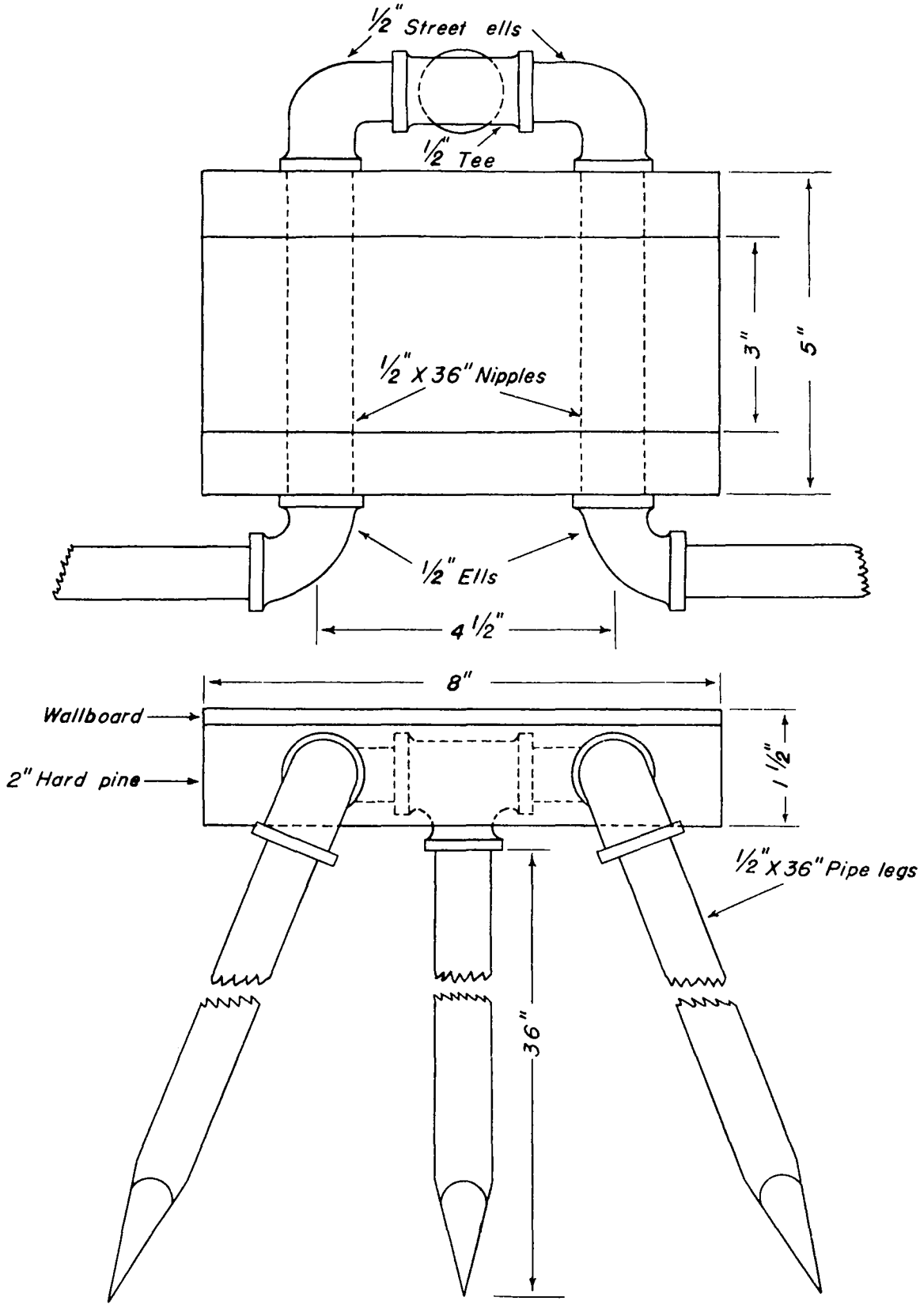

CHAINING TRIPOD
STATE CONTROL SURVEY

OCT. 1934 L.A.M.

FEDERAL SURVEYING IN OREGON

Abstract from Report of Topographic Map Committee of the Portland Oregon Chamber of Commerce, L. A. McArthur, Chairman:

" * * * Accurate topographic maps must be based on networks of geodetic control, including triangulation and levels. The development of these geodetic networks is now a function of the U. S. Coast and Geodetic Survey, which during the past few years has greatly increased its program. A large amount of new work has been carried on in Oregon by this bureau, with the result that the level and triangulation networks of the state are nearing completion.

"The geodetic program of the U. S. Coast and Geodetic at the present time calls for the installation of either a first or second order level bench mark not more than 12 or 15 miles from any place in the United States. A similar program exists for the first or second-order triangulation network. Engineers and executives in touch with development work in the state of Oregon prevailed upon the U. S. Coast and Geodetic Survey to concentrate on a leveling program for this state, with the result that in 1930 and 1931 many hundreds of miles of high grade leveling were completed and properly marked with permanent bench marks. The state engineer, the state highway engineer, various county and federal authorities and many private corporations cooperated with the U. S. Coast and Geodetic Survey in setting permanent bench marks. At the end of 1931 Oregon had one of the most highly developed precise level nets in the United States. The final standard elevations for the bench marks were computed early in 1932 by the U. S. Coast and Geodetic Survey, and Special Publication 177 giving descriptions and elevations of all these bench marks was issued. Oregon is the third state in the Union for which this information is available in printed form. Its usefulness to engineers generally can hardly be overestimated. This publication contains elevations for more than 2,850 permanent marks in Oregon. It is possible for engineers to abandon arbitrary and uncertain local datum planes and adopt instead the U. S. Coast and Geodetic Survey standard. All this work has been without cost to the State except in so far as non-financial cooperation has been accepted by the Survey.

"During the summer of 1933 additional leveling was carried on in Oregon by the U. S. Coast and Geodetic Survey. In the spring of 1934 an intensified program of second-order leveling was inaugurated in the state by the same bureau. Many new lines were completed during the fiscal year ending June 30, 1934, and much additional work was on the program for the second half of 1934.

"At the end of 1933 the U. S. Coast and Geodetic Survey, in cooperation with the CWA authorities, launched a geodetic control project in nearly every state in the Union. Such a project was carried on in Oregon under the immediate jurisdiction of R. H. Baldock, State Highway Engineer. The work was supplemental to the regular activities of the U. S. Coast and Geodetic Survey. Approximately 1,750 miles of third-order levels were completed in various parts of Oregon. A large number of new bench marks were installed, and the elevations of many old marks were re-determined and the marks themselves were made permanent. Over 300 miles of transit traverse lines were also run in various parts of the state by CWA crews. Many triangulation stations were searched for, rebuilt and re-described.

"In the spring of 1932 the U. S. Coast and Geodetic Survey issued Special Publication 175 - First and Second Order Triangulation in Oregon. This volume is of great benefit to surveyors and engineers as it contains exact latitudes and longitudes of several hundred marked stations on the 1927 datum. The U. S. Coast and Geodetic Survey has completed the computations for all the third-order triangulation stations in Oregon, thus putting the geographic positions of these stations on the 1927 datum, which is the standard throughout the entire United States. The geodetic positions of third-order triangulation stations may be secured in provisional form from the U. S. Coast and Geodetic Survey. These points are along the Oregon coast and the Columbia River.

"In 1932 and 1933 the U. S. Coast and Geodetic Survey extended first-order triangulation throughout a large part of central Oregon where there were no accurate values available for latitudes and longitudes. The positions determined from this work are in process of computation in Washington. The arcs extend from the vicinity of Prineville north to Arlington, southeast to Burns and southwest to Klamath Falls. In 1934 an arc was extended north and south adjacent to the Oregon-Idaho boundary line, and at the date of this report a reconnaissance party is preparing for an arc of first-order triangulation from Portland down the Columbia River to the sea, and an arc of second-order triangulation from Portland west to Tillamook. Oregon is now one of the most accurately triangulated states in the Union.

During the fiscal year ended June 30, 1934, a comprehensive tide survey of the Oregon coast was made by the U. S. Coast and Geodetic Survey. Automatic gages were maintained for more than a year at each of twelve important harbors, and supplemental gages were installed at other points. The tide gages were connected to permanent bench marks at each point and levels of first-order accuracy extended the entire length of the Oregon Coast highway connecting the various points.

"The past biennium has witnessed remarkable strides in geodetic progress in the state, all of which will greatly simplify mapping problems in Oregon. The Portland Chamber of Commerce has been actively interested in the work.

"The U. S. Geological Survey has carried on extensive third-order triangulation, traverse and level work in Oregon, and it is planned to adjust these geographic control networks so they will be coordinated with the work of the U. S. Coast and Geodetic Survey, which is of a more accurate character and which forms the first-order backbone or network. The U. S. Geological Survey is, as fast as funds will permit, adjusting its positions for Oregon to fit the U. S. Coast and Geodetic Survey standards. It will probably take several years to accomplish this result.

"It is believed that all level work in Oregon should be coordinated where possible and the descriptions and elevations of bench marks should be available in printed form. The results of third-order triangulation should also be published in printed form, as there is a constant demand from engineers for these data.

"In 1929 your committee reported the then serious deficiency in geodetic control in Oregon, but during the intervening five years great strides have been made so that the principal problem today is that of mapping."

-=0=-

RECOVERY OF AND STAMPING OF ELEVATIONS ON BENCH MARKS

No doubt in years past an engineer visiting a bench mark of the Coast and Geodetic Survey has been disappointed in not finding the elevation of the mark stamped on the metal disk. To obtain this information, it was necessary for him to write to the Washington Office. This meant a delay of several days with possibly some inconvenience to his surveying program. The reason for the elevations not being stamped is obvious. Lines of levels were first run over the country at very infrequent intervals, until eventually the lines formed closed loops; when the net had been filled in to such an extent that the loops were comparatively small, a general adjustment was made. The datum plane for the elevations of the National net of this country is mean sea level, and the information given is on what is called the 1929 General Adjustment. Had the elevations been stamped on the bench mark disks prior to that date, the information would not agree with the adjusted or standard elevation. Even today as new lines of levels are run, the final elevations cannot be determined until the office computations have been made.

During the past half year, a number of engineers have been employed throughout the country engaged in recovering bench marks and stamping with steel dies the final adjusted elevations on the brass disks. Now it is possible for a local engineer to connect his work to such a bench mark and have an elevation to the thousandth of a foot immediately available.

To insure that the correct elevation is stamped on the metal disk, the engineer doing the work was required to forward a facsimile of the mark after the stamping to the Washington Office. This facsimile was made by inclosing a sheet of carbon paper between the folds of a sheet of thin blank paper which was placed over the mark. Then by rubbing on the paper an exact reproduction of the data stamped on the disk was obtained. Such information upon receipt at the Washington Office is compared with the records, and should any discrepancies be noted, the errors will be immediately corrected. Local surveyors and engineers should therefore have no hesitancy in using such information.

To the casual passer-by who notes such a mark, the stamping of the elevation thereon will also be of interest. In many cases bench marks are established in prominent places visited by many people, and no doubt in the past many of these have had their curiosity aroused as to the elevations of bench marks for which no information was given.

As a further result of this work, the records of the Washington Office have been brought up to date. Information concerning the condition of marks established a number of years ago has been obtained. The mortality on some lines has been relatively high due to highway improvements and changes along the right-of-way of railroads. The engineer recovering the mark also took cognizance of changes in local surroundings and gave additional data and measurements if necessary to clarify the description. Such changes will be incorporated in the description of the bench mark, and will make for an easier recovery in the future.

-=0=-

TECHNICAL PROCEDURE FOR CITY SURVEYS

The American Society of Civil Engineers has recently published a manual of engineering practice, No. 10 in a series of such manuals, under the above title.

This is a very comprehensive manual covering the necessary types of surveys required for a complete city survey, the order in which they should be taken up, the technical procedure for each with the required accuracy to be obtained and the types of maps to show the final results.

Following is the "Historical Summary" of the compilation of the manual:

The value of comprehensive engineering surveys and maps as a basis for city planning and operation is increasingly recognized by American city governments. Such surveys are designed to supply fundamental information, and since survey needs in all cities of the United States are basically the same, in actual practice a standard form of procedure has been evolved, known as the City Survey. Early in the program of the Surveying and Mapping Division, therefore, it was decided to produce a Manual for the purpose of describing the various divisions of the complete City Survey, to furnish specifications for it, and to make detailed recommendations as to accepted technical methods. Accordingly, on January 19, 1928, a Committee on City Surveys was formed by the Division. This Committee consisted of U. N. Arthur, R. H. Simpson, and Robert H. Randall, Chairman. Mr. Simpson died on May 8, 1933. In recognition of his material service in the preparation of the Manual, G. D. Whitmore, Assoc. M. Am. Soc. C. E., was added to the Committee in January, 1931.

The Committee first prepared a preliminary draft of the proposed Manual, which was distributed widely by the Society in mimeographed form. This draft, in addition to being reviewed by many members of the Society, was sent for comment to the United States Coast and Geodetic Survey, to the United States Geological Survey, and to universities and other agencies or persons whose views were desired. Upon receipt and analysis of these comments, the Committee prepared a final draft which was submitted to the Division, approved in January, 1932, and transmitted by the Division to the Board of Direction of the Society which authorized its publication on January 15, 1934.

Since the text of this Manual was completed and forwarded by the Division to the Board of Direction, new and unforeseen opportunities for the utilization of such a Manual have arisen. City planning and regional planning have received a tremendous impetus from the activities of the Public Works Administration, the Civil Works Administration, and the Federal Emergency Relief Administration. Surveys such as are detailed in the Manual have been begun in many places and may be expected to continue, spurred by the need of providing plans for the construction involved in Federal

employment programs, and, in many instances, financed out of such Federal employment funds. It is to be hoped that this Manual will find increasing use in the organization and training of engineers in the performance of City Surveys.

-=0=-

THE NEED FOR MAPS

(Reprinted from The Military Engineer, January - February, 1935).

The Editor:

During the past eighteen months of enormous expenditures of government funds in an effort to relieve unemployment and at the same time accomplish something really worthwhile, I have often wondered at the lack of a real effort to complete the topographical map of the United States. The preparation of this map is a public function in no way competing with private enterprises.

I realize that considerable sums have been allotted during this period for map work. In my own state the Coast and Geodetic Survey has done quite a little work on their triangulation system. To my mind, however, it has seemed to be a piecemeal effort and totally inadequate to our needs.

During my thirty-six years of engineering and army experience the need for accurate topographic sheets has constantly arisen. Very few people, I feel, have any conception of the value of accurate maps in the location of large scale industrial enterprises. Their need in military operations is, of course, well known and unquestioned.

The first task of a locating engineer, when assigned a job, be it railroad, highway, transmission, or pipe line, is a study of the topography of the country involved. If good maps are not available, he is out of luck, and must make many costly and time consuming reconnaissance trips.

During the World War it was my privilege to serve on the Board designated to select a site for the Infantry School near Columbus, Georgia. Fortunately the topographic sheet of the Columbus quadrangle was in existence. By the use of this sheet I selected the site of the present Fort Benning the night of my arrival in Columbus. The next day we made an inspection on the ground. A number of boards had visited Columbus prior to this time, but none had

visited this particular site, because they only went where they were taken by the representatives of the Chamber of Commerce. But for this topographic sheet, I feel that the present admirable site of Fort Benning would have been lost to the Army.

A few years ago I took an active part in the promotion of the proposed Great Smoky Mountains National Park. Topographic sheets of this region were in existence but were very old and inaccurate. When the park became a reality and development work started, a special appropriation was secured from Congress for the purpose of making a new topographic map of this area. Practically nothing could be accomplished in the way of development until this map was completed.

Only recently I participated in the efforts of Tennessee to secure a portion of the proposed Scenic Parkway connecting the Shenandoah and Great Smoky Mountains National Parks. The extensive use of the topographic sheets of this region were, of course, necessary in this work. I found, however, that in Virginia many of these quadrangles were unsurveyed.

I believe that less than half the country is now mapped. In many instances where sheets are now published they are very old and obsolete. A few days past I secured the Briceville, Tennessee, sheet, which is the one covering the location of the Norris Dam. I found that the main line of the Louisville and Nashville Railroad from Cincinnati via Knoxville to Atlanta, which almost bisects this sheet, was not shown. Also the little city of LaFollette, about twenty-five hundred population, was not shown, as both were built after surveys were made nearly fifty years ago. We have made more complete maps of the Philippine Islands than of our own country.

I feel that nothing could be done as a relief measure which would prove of greater future benefit to the nation than the completion of this topographic map. All of the mapping agencies of the government could and should be concentrated on this one effort. It is a project that would employ many men, both white collar and laboring classes. The work could be carried on throughout the year by working in the southern states in winter and the northern states in summer. If this map was once completed the present forces of the Geological Survey could, no doubt, keep it up to date.

Much time and money is constantly being spent on surveys and preparation of special maps covering a limited terrain, which would be unnecessary if an accurate topographic map of the entire country were available.

Unless the Army has far better maps than I know of, they would be greatly handicapped in any military operations on our own soil.

Completion of this map is something for which the nation has been striving for one hundred and fifty years. It would be of inestimable value to industry in time of peace and to the Army in time of war.

Frank Maloney,
Lieutenant Colonel,
Infantry Reserve.

Knoxville, Tennessee.

-=0=-

USE OF GEODETIC CONTROL IN LOCATING PROPERTY BOUNDARIES

A recent paper by Mr. A. H. Holt, published in the "Transactions" of the American Society of Civil Engineers entitled "The Surveyor and His Legal Equipment" very ably sets forth the duties of a surveyor to his client in resurveying or reestablishing property boundaries and points out many of the difficulties he may encounter. It concludes with the following paragraphs:

"As in many things, so in the matter of uncertain boundaries, 'an ounce of prevention is worth a pound of cure.' How much better it would be if surveyors and landowners could appreciate the importance of so marking boundaries when they are first established that there will be little likelihood of their being obliterated, and of so referencing them that they can be re-established economically and precisely if that should ever be required. By the progress of the precise surveys of the United States Coast and Geodetic Survey the most reliable and satisfactory control is being made more and more widely available. While the general use of this control for the description of the boundaries of lands is probably still in the distant future, engineers should be in the lead in recognizing its utility and its value, and in urging and facilitating the adoption of this means of increasing the certainty and permanence of private boundaries.

"In the meantime, and even with the use of the control mentioned, the best and most economical assurance that a boundary can be recovered in the future in its original location is the use of definite, distinctive, and enduring

monuments; and the best law that can be promulgated to contribute to this end, is that which was laid down many centuries ago: 'Thou shalt not remove thy neighbor's landmark, which they of old time have set.'"

-=0=-

NOTICE

The A B C Triangulation Adjustment, by H. P. Kaufman, Assistant Mathematician, U. S. Coast and Geodetic Survey, has recently been published and is available upon application to interested persons.

-=0=-

REPORT OF PROGRESS

Triangulation:

Lineal miles of triangulation through axis of schemes completed during December, 1934:

First-order - - - - - - - - - - - - - - -	1285
Second-order- - - - - - - - - - - - - - -	0

Total miles of triangulation completed to December 31, 1934:

First-order - - - - - - - - - - - - - - - -	53,109
Second-order - - - - - - - - - - - - - - -	3,321

Levels:

Lineal miles of levels completed in December 1934:

First-order - - - - - - - - - - - - - - - -	848
Second-order - - - - - - - - - - - - - - -	8,847

Total miles of levels completed to December 31, 1934:

First-order - - - - - - - - - - - - - - - -	100,148
Second-order - - - - - - - - - - - - - - - -	91,317

-=0=-