T. SOLER and I.I. MUELLER
Department of Geodetic Science
The Ohio State University
Columbus, Ohio.

# GLOBAL PLATE TECTONICS AND THE SECULAR MOTION OF THE POLE *

**Abstract**

*Astronomical data compiled during the last 70 years by the international organizations (ILS / IPMS, BIH) providing the coordinates of the instantaneous pole, clearly shows a continuous drift of the "mean pole" ( ≡ barycenter of the wobble cycle with respect to the Conventional International Origin (CIO).*

*This study was undertaken to investigate the possibility of an actual secular motion of the barycenter (approximated by the earth's maximum principal moment of inertia axis or axis of figure) due to differential mass displacements from lithospheric plate rotations. The method assumes the earth's crust modeled as a mosaic of 1° x 1° blocks, each one moving independently with their corresponding absolute plate velocities. The differential contributions to the earth's second–order tensor of inertia were computed, resulting in no significant displacement of the earth's axis of figure.*

*In view of the above, the possible* apparent *displacement of the "mean pole" as a consequence of station drifting due to absolute plate motions was also analyzed, again without great success. As a further step the old speculation of the whole crust possibly sliding over the upper mantle is revived and the usefulness of the CIO is questioned.*

## 1. Theoretical Considerations

### 1.1. Differential Contributions to the Earth Inertia Tensor Due to Plate Rotations

The differential contribution to the initial earth tensor of inertia $[I]_E$ due to differential changes in longitude and colatitude $(\delta\lambda, \delta\theta)$ of a sample block k (see *Fig. 1*) may be expressed after neglecting second–order terms as [Soler, 1977]

$$[\Delta I_{ROT}] = [\Delta I_\lambda]\,\delta\lambda + [\Delta I_\theta]\,\delta\theta$$

Brackets [ ] indicate 3 x 3 real matrices, while braces { } later in the paper represent 3 x 1 vector matrices. The symbol $\underline{[\ ]}$ denotes skew–symmetric matrices of the following type

$$\underline{[a]} = \begin{bmatrix} 0 & -a_3 & a_2 \\ a_3 & 0 & -a_1 \\ -a_2 & a_1 & 0 \end{bmatrix}$$

* – Presented at the IAU Symposium No. 78, "Nutation and the Earth Rotation", Kiev, 22–29, May, 1977.

*Bull. Geod. 52 (1978) pp. 39–57.*

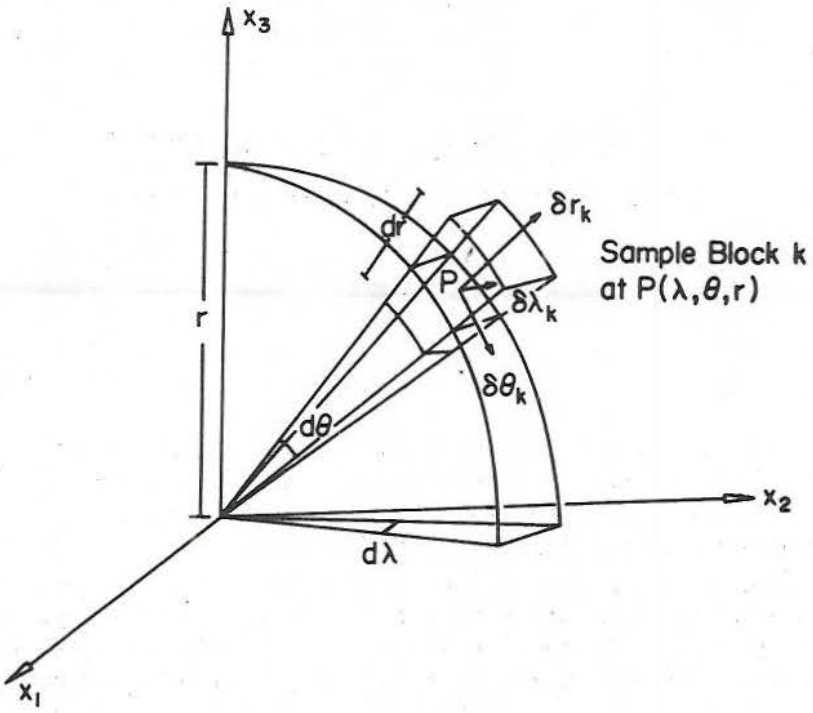


*Fig. 1 – Differential Motions of Sample Block k.*

In the equations above

$$[\Delta I_\lambda] = \int_v \rho_{(\lambda,\theta,r)} \begin{bmatrix} \sin\theta \sin 2\lambda & -\sin\theta \cos 2\lambda & \cos\theta \sin\lambda \\ & -\sin\theta \sin 2\lambda & -\cos\theta \cos\lambda \\ \text{SYMMETRIC} & & 0 \end{bmatrix} r^4 \sin^2\theta \, d\lambda \, d\theta \, dr$$

and (1)

$$[\Delta I_\theta] = \int_v \rho_{(\lambda,\theta,r)} \begin{bmatrix} -\sin 2\theta \cos^2\lambda & -\sin\theta \cos\theta \sin 2\lambda & -\cos 2\theta \cos\lambda \\ & -\sin 2\theta \sin^2\lambda & -\cos 2\theta \sin\lambda \\ \text{SYMMETRIC} & & \sin 2\theta \end{bmatrix} r^4 \sin\theta \, d\lambda \, d\theta \, dr$$

where the block density $\rho_{(\lambda,\theta,r)}$ at each location $(\lambda, \theta)$ is a different discrete function of the radius $r$. If the total earth crust is considered, one may write the contribution to $[I]_E$ due to plate rotations as

$$[\Delta I]_P = \sum_{i=1}^{n} [\Delta I_{ROT}]_{P_i}$$

where n is the number of tectonic plates constituting the earth crust. The elements in the summation of the right–hand side in the above equation are given by

$$[\Delta I_{ROT}]_{\bar{P}_i} = \sum_{k=1}^{m} (\delta \lambda_k [\Delta I_\lambda]_k + \delta \theta_k [\Delta I_\theta]_k) \qquad (2)$$

where

$m \equiv$ number of sample blocks on plate $P_i$

$[\Delta I_\lambda]_k$ and $[\Delta I_\theta]_k \equiv$ differential changes in the tensor of inertia of block k computed from equations (1) involving the integration over the mass of each sample crustal block.

Hence one should define a crustal model with appropriate changes of density. Also, since the summation in equation (2) assumes knowledge of the plate boundaries and the differential motions for every block, a model of plates and corresponding absolute velocities must be defined.

### 1.2. Crustal Model

Knowledge of the earth's crustal structure has advanced considerably in the last half century, primarily due to investigations in gravimetry and seismology.

Seismic research shows a marked boundary between the crust and the upper mantle known as the Mohorovičić discontinuity (also referred to as Moho or M discontinuity), which separates two layers of very distinct density and seismic velocity. It has also been fairly well established that the Airy–Heiskanen depth of isostatic compensation agrees well with the depth of the M discontinuity in the ocean basins as well as under the continents. This reinforces the hypothesis that on a continental scale the earth's crust is at least approximately in a state of isostatic equilibrium. To model the crustal thickness of the upper shell of the earth as closely as possible to reality in a computationally–feasible manner, the formulation in [Heiskanen and Vening–Meinesz, 1958, p. 137] giving the depth of the roots and antiroots of crustal blocks was adopted. It was further assumed that the irregular crust is joined rigidly to the upper part of the lithosphere (tectosphere) and moves with it as a mechanical unit. An ideal boundary of 50 km depth containing all inhomogeneities of the crust was taken as the lower limit of the solid earth's upper shell. Below that boundary, the earth is thought to be structured in some homogeneous fashion, not producing any variation in the crustal tensor of inertia.

The model of plates (see *Fig. 2*) and their velocities were taken from [Solomon *et al.*, 1975] where absolute angular velocities of the plates relative to the underlying mantle are given after consideration of several driving mechanisms which can be modeled quantitatively and which are capable of affecting the absolute velocities (see *Table 2* for a description of the different models). *Fig. 2* depicts the distribution of plates and the location of border points used in the integration.

### 1.3. Changes $(\delta \lambda_k, \delta \theta_k)$ in Each Block Due to Plate Motions

Once the absolute angular velocity vector for each plate is known, the changes $\delta \lambda_k$ and $\delta \theta_k$ in longitude and colatitude for a sample block k may be computed. The

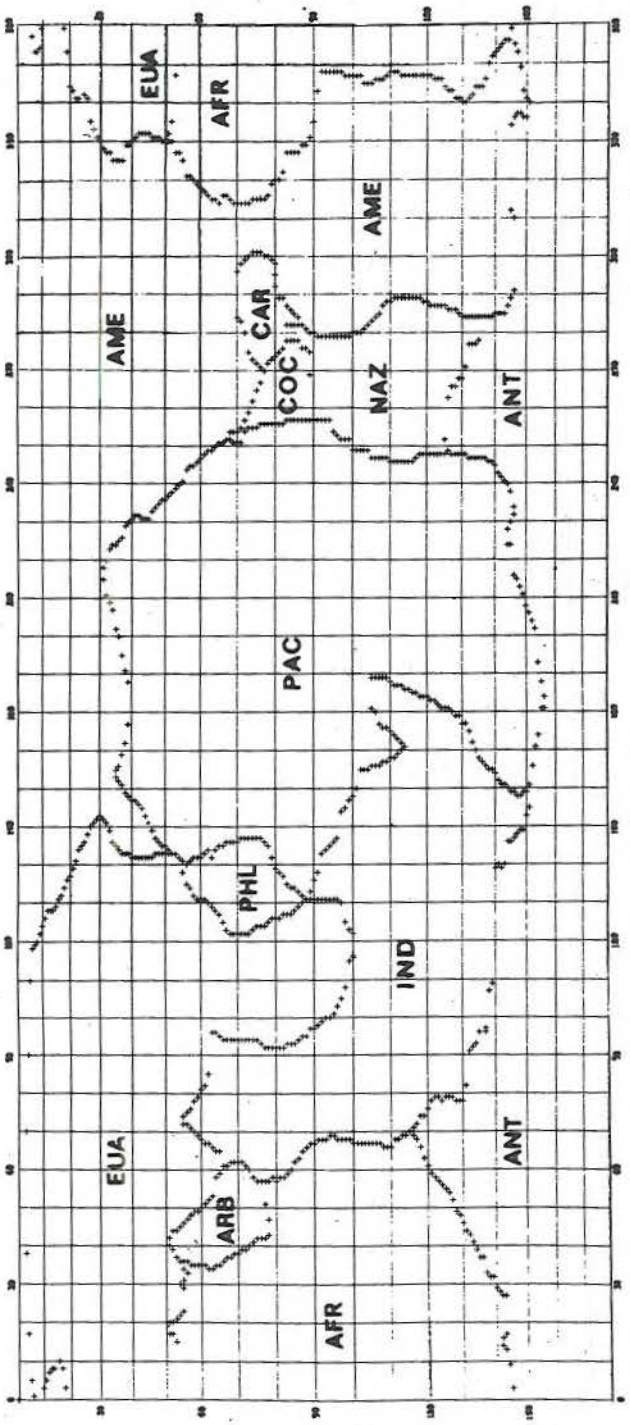


*Fig. 2 — Plate Boundaries Used in Evaluating the Integrals After [Solomon et al., 1975].*

required formulation for evaluating the differential changes in the curvilinear coordinates at a point, after a differential rotation is performed, is the following [Soler, 1976] :

$$\begin{Bmatrix} \delta\theta \\ \delta\lambda \\ \delta r \end{Bmatrix}_k = H^{-1} R [\delta \underline{\omega}]_{P_i} \begin{Bmatrix} r \sin\theta \cos\lambda \\ r \sin\theta \sin\lambda \\ r \cos\theta \end{Bmatrix}_k \tag{3}$$

where

$H \equiv$ "metric matrix" of the differential transformation between curvilinear and Cartesian coordinates;

$R \equiv$ rotation matrix of the transformation between the geocentric and "local moving" frames;

$[\delta \underline{\omega}]_{P_i} \equiv$ skew–symmetric matrix of the absolute angular velocity vector for the particular plate $P_i$ containing the block $k$ .

After substitutions, equation (3) yields

$$\delta\lambda_k = \delta\omega_3 - \delta\omega_1 \cos\lambda_k \cot\theta_k - \delta\omega_2 \sin\lambda_k \cot\theta_k$$

$$\delta\theta_k = -\delta\omega_1 \sin\lambda_k + \delta\omega_2 \cos\lambda_k$$

where $\delta\omega_i$ $(i = 1, 2, 3)$ are the components of the absolute angular velocity vector with respect to the conventional terrestrial frame.

## 2. Numerical Experiments and Results

### 2.1. Earth Tensor of Inertia $[I]_E$

Relations can be established between the earth moments and products of inertia and the coefficients of the earth gravitational potential as given by the spherical harmonic expansion [Hotine, 1969, p. 160] .

The current estimate of the earth tensor of inertia $[I]_E$ relative to the CIO–BIH terrestrial reference frame, as derived from the satellite potential coefficients given in [Gaposchkin, 1974] is (units in $g\ cm^2$)

$$[I]_E = \begin{bmatrix} 8.015119938 \times 10^{44} & 0.428465360 \times 10^{40} & 0.363300798 \times 10^{36} \\ & 8.015269280 \times 10^{44} & -0.312973200 \times 10^{37} \\ \text{SYMMETRIC} & & 8.041506418 \times 10^{44} \end{bmatrix}$$

If the matrix $[I]_E$ is diagonalized, the principal moments of inertia of the earth and the directions of the central principal axes with respect to the CIO–BIH system may be determined. The principal moments about these axes 1 , 2 and 3 are

$$A = 8.015108518 \times 10^{44} \text{ g cm}^2$$

$$B = 8.015280700 \times 10^{44} \text{ g cm}^2$$

$$C = 8.041506418 \times 10^{44} \text{ g cm}^2$$

respectively, and the polar coordinates of the positive direction of the central principal axes are ($\lambda$ positive to the east)

$$\text{Axis 1} \quad \begin{cases} \lambda_1 = -14^\circ\ 55'\ 25''.30 \\ \varphi_1 = -\ 0^\circ\ 0'\ 0''.09 \end{cases}$$

$$\text{Axis 2} \quad \begin{cases} \lambda_2 = 75^\circ\ 4'\ 34''.70 \\ \varphi_2 = 0^\circ\ 0'\ 0''.23 \end{cases}$$

$$\text{Axis 3} \quad \begin{cases} \lambda_3 = -83^\circ\ 30'\ 23''.31 \\ \varphi_3 = 89^\circ\ 59'\ 59''.75 \end{cases}$$

An interesting result is the direction of the earth's first principal axis which is practically on the equator, but about $15^\circ$ west of the BIH zero meridian. Thus the semimajor axis of the earth's triaxial central momental ellipsoid lies $14^\circ.9$ W of the BIH zero meridian. This agrees very well with the finding by Burša [1970] who gives for a best–fitting triaxial ellipsoid the value of $14^\circ.8$ W.

### 2.2. Crustal Tensor of Inertia $[I]_C$

The crustal tensor of inertia can be computed using the matrix equation

$$[I]_C = \int_V \rho_{(\lambda,\theta,r)} \begin{bmatrix} 1-\sin^2\theta\cos^2\lambda & -\sin^2\theta\sin\lambda\cos\lambda & -\sin^2\theta\cos\theta\cos\lambda \\ & 1-\sin^2\theta\sin^2\lambda & -\sin\theta\cos\theta\sin\lambda \\ \text{SYMMETRIC} & & \sin^2\theta \end{bmatrix} r^4 \sin\theta\, d\lambda\, d\theta\, dr$$

To account for the earth's ellipticity in a reasonable way, the limits of integration with respect to r in the above equation as well as in equations (1) are functions of the earth's geocentric radius (see [Soler, 1977]). The use of the geocentric radius introduces what may be considered a block deflection, i.e., each block is aligned with its central radius vector and therefore is not normal to the earth ellipsoid. The error introduced is negligible considering that the maximum deflection at about $45^\circ$ latitude for an ellipsoid the size of the earth is only $12'$, clearly insignificant in the context of these computations. The matrix elements of $[I]_C$ computed from the formula are presented in ***Table 1***. Tabulated are the individual tensors of inertia for each plate ***(Fig. 2)*** as well as the corresponding total tensor of inertia for the whole crust. The resulting eigenvalues (principal moments of inertia) and the polar coordinates ($\lambda$, $\varphi$) of the corresponding eigenvectors (directions of the principal axes) with respect to the terrestrial system for the whole 50 km deep crust are

$$A = 0.197654740 \times 10^{44} \text{ g cm}^2$$

$$B = 0.197572195 \times 10^{44} \text{ g cm}^2$$

$$C = 0.198120188 \times 10^{44} \text{ g cm}^2$$

$$\text{Axis 1} \begin{cases} \lambda_1 = -11^\circ\ 46'\ 47''.85 \\ \varphi_1 = -\ 1^\circ\ \ 4'\ 49''.40 \end{cases}$$

$$\text{Axis 2} \begin{cases} \lambda_2 = \ \ 78^\circ\ \ 7'\ 50''.20 \\ \varphi_2 = \ \ \ 4^\circ\ 43'\ 53''.34 \end{cases}$$

$$\text{Axis 3} \begin{cases} \lambda_3 = -88^\circ\ 56'\ 55''.58 \\ \varphi_3 = \ \ 85^\circ\ \ 8'\ 46''.27 \end{cases}$$

From these results, when compared to the previously–given earth values, the following can be concluded :

(a) The principal moments of inertia of the earth crustal layer (50 km depth) represent only 2 % of the principal moments of the earth.

(b) The maximum moment of inertia of the modeled crust is situated about $5^\circ$ from the CIO in the direction of $\lambda \approx -89^\circ$ (The axis of figure of the whole earth is situated in the direction $\lambda \approx -83^\circ.5$.).

(c) The crust has a principal axis of inertia close to the equator but at $\lambda \approx -12^\circ$ (Recall the value $\lambda \approx -15^\circ$ for the whole earth).

A major disagreement with previously reported values appears to be in the above results. **Milankovich** in 1941 [see **Scheidegger**, 1963, p. 179] and **Munk** [1958] have found the pole of the earth's "continental–ocean" distribution near Hawaii. The reader should be aware of the following major differences between the assumptions inherent in these investigations :

(i) **Milankovich** used a $20^\circ \times 20^\circ$ grid, and **Munk** employed a $10^\circ \times 10^\circ$ grid in the integration between continental boundaries.

(ii) Their model was simpler. **Milankovich's** work was restricted to standard continental coastlines. He weighted differently the areal mass density for continents as compared to oceans, even without evaluating the integrals. **Munk** included in his calculations the continental structure up to 1000 fathoms depth. He used a mean elevation of 0.9 km for land masses after postulating global isostatic compensation.

(iii) Both investigators assumed a spherical earth.

After the discrepancies were noticed, an attempt to reconcile them was under–taken and new evaluations of the integrals were made under various modeling hypotheses :

(a) Only the standard crust is considered (This includes the crustal masses contained above the Moho discontinuity and therefore excludes the layer of tectosphere down to 50 km depth).

(b) Same as above but for a spherical earth.

(c) The crustal model (50 km deep) selected for this investigation is used but over the spherical earth.

The results concerning case (a) show agreement with the previously reported findings. The maximum moment of inertia of the standard crust is about an axis with polar coordinates,

$$\lambda = -170^\circ\, 39'\, 48''.13 \qquad \varphi = 14^\circ\, 45'\, 42''.45$$

This corresponds to an area west of the Hawaiian archipelago, close to Wake Island. The minimum moment of inertia is about an axis passing near the northend of the river Ob in the U.S.S.R. The magnitude of the principal moments in this case represents only 1 % of the total earth.

Case (b) gives basically the same results. Consequently when only the standard crust is integrated, the effect of the earth's ellipticity may be considered negligible. This implies that the asymmetric continental masses (dominant in this case) are distributed over the earth in such a way that their principal axes are not affected even under the assumption of equatorial bulge.

Case (c) introduces drastic changes with respect to the original results where the ellipticity of the earth was taken into consideration. The results are as follows :

$$A = 0.197711159 \times 10^{44}\ \mathrm{g\,cm^2}$$

$$B = 0.197800169 \times 10^{44}\ \mathrm{g\,cm^2}$$

$$C = 0.197833713 \times 10^{44}\ \mathrm{g\,cm^2}$$

$$\text{Axis 1} \begin{cases} \lambda_1 = & 81^\circ\, 41'\, 4''.67 \\ \varphi_1 = & 42^\circ\, 51'\, 36''.04 \end{cases}$$

$$\text{Axis 2} \begin{cases} \lambda_2 = & -119^\circ\, 17'\, 35''.91 \\ \varphi_2 = & 45^\circ\, 10'\, 38''.27 \end{cases}$$

$$\text{Axis 3} \begin{cases} \lambda_3 = & -\ 18^\circ\, 22'\, 30''.68 \\ \varphi_3 = & 10^\circ\, 39'\, 37''.67 \end{cases}$$

Thus using our crust–tectosphere model but on a spherical earth, the maximum principal moment of inertia axis is no longer near the CIO but at the point with coordinates $\lambda \approx -18^\circ$ and $\varphi \approx 11^\circ$. Consequently the bulge of the earth becomes an important factor when the masses below the oceanic standard crust are considered.

Comparing the results of this section, one actually may conclude that at the present the more dense inhomogeneities of the earth crustal layer are situated around the equatorial belt. Therefore, the role of the continents as sole agents in the phenomenon of balancing the earth's axis of figure lacks strength. A better intuitive picture is attained when the whole plate tectonic structure is considered. The layer of higher density below the oceanic plates makes all the difference. These masses were always neglected in previous investigations. Hence the present ellipsoidal earth seems to be quasi–dynamically balanced

as the distribution of plate masses proves, with the large dense ones (primarily oceanic) occupying the areas around the equatorial bulge.

### 2.3. Displacement of the Axis of Figure

The position of the axis of figure after the lithospheric plate motions are considered may be computed by diagonalizing the matrix $[I]$ given by

$$[I] = [I]_E + [\Delta I]_P$$

The differential contribution $[\Delta I]_P$ to the original earth tensor $[I]_E$ alters the initial position of the earth principal axes, displacing them after the crustal masses have moved. Thus, after diagonalizing $[I]$, the new position of the disturbed earth axis of figure will be known, and a comparison will be possible.

The axis of figure displacements for the crust and for the whole earth are given in *Table 2.*

Several conclusions derive from the tabulated results :

(a) The first and most important one is that lithospheric motions as described by recent geophysical theoretical models do not produce any significant changes in the principal pole of inertia.

(b) While the earth axis of figure remains practically unaffected by plate motions, even during periods of a century or longer, the pole of the crust moves about ten centimeters per century in the general direction of the earth maximum moment of inertia axis. The vector displacement for the motion of the crustal pole is about 50 times larger than the one for the earth pole.

(c) The general direction of the motion of the pole of the crust coincides with the prediction of Milankovich [Jardetzky, 1962], and is in accordance with "Milankovich's theorem" [Scheidegger, 1963, p. 177]. This implies that the inertia of continental plates is less than that of oceanic plates. This is a fact established before, and does not contradict any isostatic model. Once again global tectonics fits the geophysical scenario, avoiding previously reported contradictions in the direction of polar wandering [see Munk and MacDonald, 1960, p. 277].

### 2.4. Apparent Motion of the Mean Pole Due to Station Shifts

It became evident by the results of the previous section that the earth axis of figure does not suffer any significant real displacement as a consequence of tectonic plate motions. Therefore the possibility of an apparent secular motion in the computed barycenter of the observed wobble, produced mainly by the drifts of the observatories (due to plate rotations) monitoring polar motion was studied.

Systematic shifts at the different IPMS and ILS observatories caused by plate rotations can be determined according to the following procedure : First, differential changes $\{dx\}$ in the Cartesian coordinates $\{x\}$ at each station j due to the differential rotations $\{\delta\omega\}$ of the corresponding plate $P_i$ are obtained using the expression

$$\{dx\}_j = [\underline{\delta\omega}]_{P_i} \{x\}_j$$

After the proper plate rotations are applied to each observatory, a new set of

"disturbed" station coordinates $\{\tilde{x}\}_j$ is found

$$\{\tilde{x}\}_j = \{x\}_j + \{dx\}_j$$

These coordinates essentially define a new Cartesian system (the rotated one).

The problem is then reduced to determining the angles which will transform the original CIO system $(x)$, say at epoch $T_0$, to the new "apparent" system $(\tilde{x})$ at epoch $T_1$. This displacement, in a sense equivalent to the one between the barycenters of the wobble, at epochs $T_0$ and $T_1$ is a consequence of the station motions due to plate rotations. Hence the position of the $(\tilde{x})$ system may be considered the apparent position of the $(x)$ frame induced by the motion of the observatories themselves during the interval $T_1 - T_0$.

The coordinates of the two systems are related by the known transformation

$$\{\tilde{x}\}_j = R_\delta \{x\}_j = [[\delta \underline{a}]^T + [1]]\{x\}_j$$

where $\delta a_i$ $(i = 1, 2, 3)$ are the counterclockwise rotations about the initial (CIO) reference frame and $[1]$ is the $3 \times 3$ unit matrix.

By a least squares solution the values of $\delta a_i$ for each particular absolute velocity plate model (see *Table 2)* using ILS and IPMS stations were obtained. The results are presented in *Figs. 3* and *4.* They show the apparent displacement of the mean pole caused by the motion of the observatories for the eight absolute velocity plate models as given in [Solomon *et al.,* 1975] during a 70–year span. The bottom of the figure also shows the apparent displacement of the equatorial $x_1$ axis.

After comparing the results from IPMS and ILS stations, the following conclusions are apparent :

(a) Some apparent displacement of the mean pole is produced by the tectonic plate motions and should be implicit in the IPMS and ILS observations.

(b) The rate (10 % to 20 % of the astronomically observed value) and direction of this apparent drift depend greatly on the total number of observing stations included in the analysis, and on the absolute velocity plate model. If the number of stations is increased, the amount of displacement is reduced and the direction of the drift changes slightly toward the 90° W longitude. A greater number of observing stations located on different plates tends to average better and produce less apparent motion of the pole. While in the case of the possible true displacement of the pole all the geophysical models provide practically the same answers, the dependence on the model increases when the apparent position of the pole is obtained from the consideration of station drifts.

Consequently, caution should be exercised in the use of absolute velocity plate models, because they are theoretical and do not necessarily reflect the actual displacements of the plates. Hence these models should not be assumed valid and used to compute the corrections to present observations,

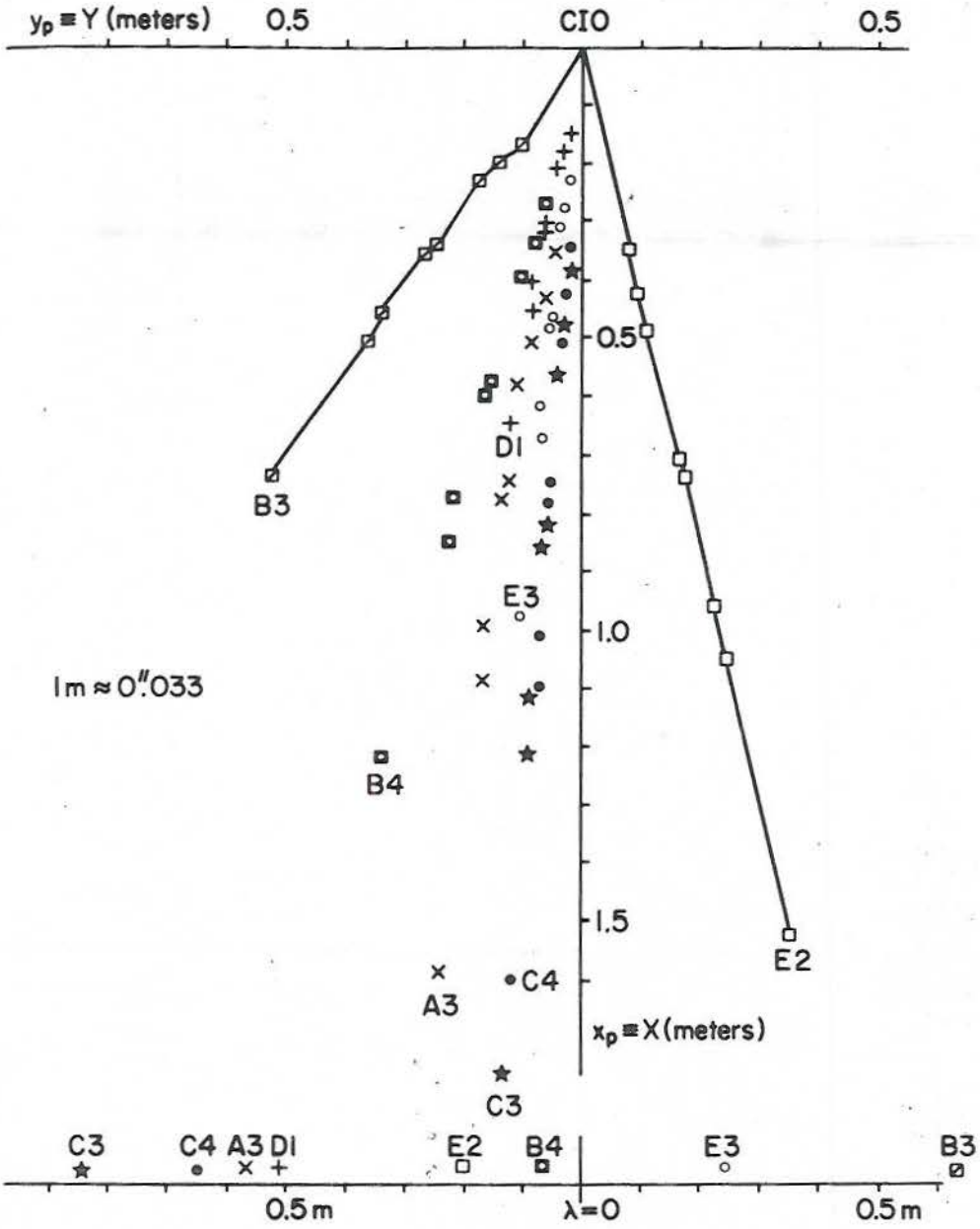


*Fig. 3 — Apparent Pole and Reference Meridian Displacement over 70 Years from the ILS Stations for Different Absolute Plate Velocity Models.*

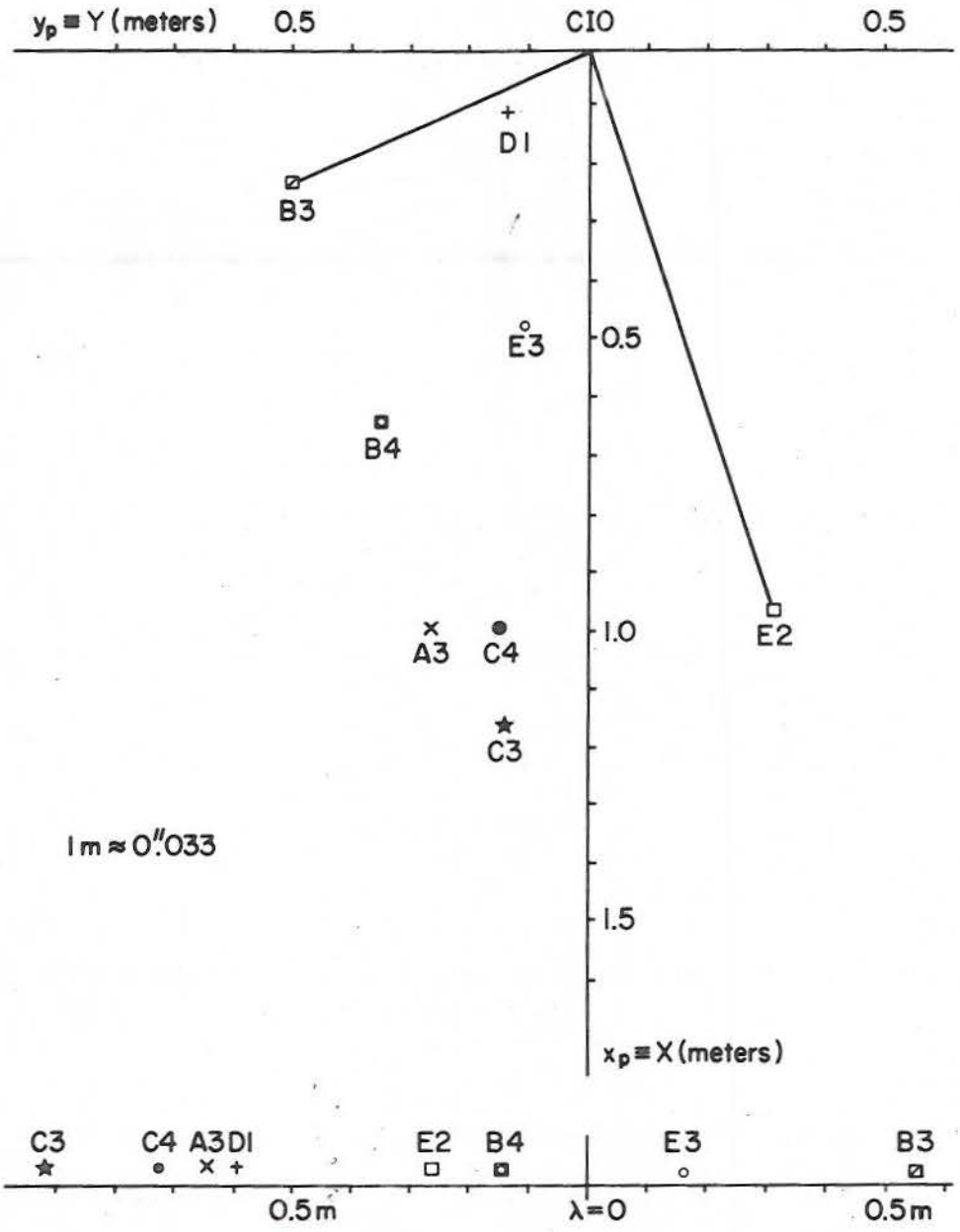


*Fig. 4 — Apparent Pole and Reference Meridian Displacement over 70 Years from the IPMS Stations for Different Absolute Plate Velocity Models.*

### 3. Crustal Sliding (? ) and Conclusions

The objective of this investigations was directed to answer the controversial question : Is there a *true* secular motion of the pole ?

An examination of the geophysical hypotheses available to explain the astronomically observed drift of the mean pole suggests changes in the earth's inertia tensor as a plausible cause. The conclusion of this analysis (subject to the modeling constraints) is that there is no evidence of a *true* secular motion of the earth axis of figure due to tectonic plate movements. It is recognized that the various mechanisms assumed to drive the plates are associated with mass changes below the boundary (50 km) assumed in this investigation and they were not considered here. However it is likely that inertia changes resulting from these other mass movements would be of the same magnitude as those from the plates themselves, and thus negligible. The same should be true for other similar mass redistributions (e.g., sea level changes, ice melting) as well.

Consequently the astronomic evidence only shows the *apparent* motion of the wobble's barycenter due to drift of the observing stations as a consequence of lithospheric motions. The preceding assumption is not fully supported by the results of Section 2.4. In view of the above disagreement, an old question should be reopened : Is there a sliding of the whole lithospheric crust ?

This concept preceded the present theory of global plate tectonics by many years [Wegener, 1929, p. 152]. Several models have been proposed as possible driving mechanisms, although none of them is fully accepted. A conceptually simple driving mechanism appears implicit in the results of this investigation. Having a dynamical base, it fits somewhat the geophysical as well as the astronomical evidence.

Assume that the whole crustal upper layer, as modeled in this study, can slide over the mantle. According to basic gyrodynamic theory [Inglis, 1957, and Munk, 1958], the tendency of the thin shell is to attain dynamical stability, i.e., the principal axes of the crust will tend to interlock with the principal axes of the whole earth. This mechanism, in accordance with the results of Section 2.2, will produce a westward drift of the lithosphere at the equator and an eastward displacement at the north pole.

Crustal sliding over the mantle is not opposed by geophysical formalism. Munk and MacDonald [1960, p. 282] point out that a thin outer layer sliding over the interior could result in a shell displacement of a few degrees at most, and that the stress generated is too small to lead to failure. The maximum (current) displacement postulated here is about $5^{\circ}$ , consistent with this reasoning.

Jardetzky [1962] also considered the possibility of the sliding of the crustal shell over the mantle : transgressions and regressions, the formation of guyots, vertical displacements of individual blocks forming a continent, and some features in connection with shear pattern distributions, all mentioned as favorable evidence in defense of the sliding crust.

An equatorial westward rotation of the crust is also supported by astronomic observations. Recently Proverbio and Poma [1976] considered a group of 16 BIH observatories located on six different plates. After analyzing time—scale data from 1962 to 1967, they obtained a final westward drift of the whole crust which accounts for the observed deceleration in the earth rotation.

Astronomically observed latitude also supports the proposed hypothesis of a sliding of the crust at the north pole in the opposite direction of the reduced secular

motion of the mean pole. The variation of latitude at the ILS observatories shows a decrease or increase in station latitude depending on whether they are in the eastern or western hemisphere [see Yumi and Wako, 1970].

*Fig. 5* represents schematically the situation at the north pole, if an assumed easterly slippage of the crust occurs. Two hypothetical epochs $T_0$ (when the axis of figure and the CIO coincided) and $T_1$ (around 100 years later) are shown. The axis of figure of the whole earth will not change during such a period of time. The initial CIO assumed to be fixed to the crust will move with it, thus causing an apparent motion of the mean pole or barycenter, precisely in the direction opposite to the crustal displacement.

According to this hypothesis the apparent displacement of the pole will be composed of two movements :

(1) Motion due to the assumed crustal slippage.

(2) Motion due to the drifting of the stations, as a consequence of plate tectonics.

In *Fig. 6* these two apparent motions are illustrated for a 70–year span starting around 1900. One vector represents the apparent direction of the principal pole of inertia due to the eastward slippage of the crust ; its axis of figure pursues the earth principal axis in the opposite direction (see Section 2.2). The other vector is the apparent motion of the IPMS barycenter caused by station drifts. Observe that the resulting vector of these two motions closely agrees with the actual observed position of the barycenter. The required slippage is about 10–12 cm/year.

It is general practice today to apply what is known as "polar motion correction" to reduce observations to the CIO system assumed to be time invariant and earth–fixed. However in view of the above just the opposite may occur, i.e., each correction reduces the observation to a crust–fixed, thus from the earth's point of view, a possibly time–dependent, reference system. This is the primary disadvantage of a crust–fixed reference system : observations reduced at different epochs may not refer to a common, time and space invariant, system.

If the above hypothesis is true, from the geodynamic point of view (not necessarily from the geodetic), it may be preferable to refer all observations to an earth or mantle fixed system. In order to do that, the instantaneous pole will need to be referred always to the same (or nearly the same) point, e.g., the nearly motionless axis of figure (principal axis of inertia) of the earth situated approximately at the barycenter of a wobble–cycle. At the same time the international organizations monitoring polar motion should give the apparent secular displacement of the mean pole, since this would provide a way of learning about the rate and direction of the possible crustal slippage, an important factor in geophysical research.

Proponents of a mantle–fixed reference system are not few in number ; among them, Melchior [1975] and Mueller [1975] postulated its advantages. Previously Fedorov (see e.g., [Fedorov *et al.*, 1972]) also recommended the use of the mean pole of date instead of the CIO.

In all, these matters should be carefully considered before a new reference system is adopted by the IUGG and the IAU.

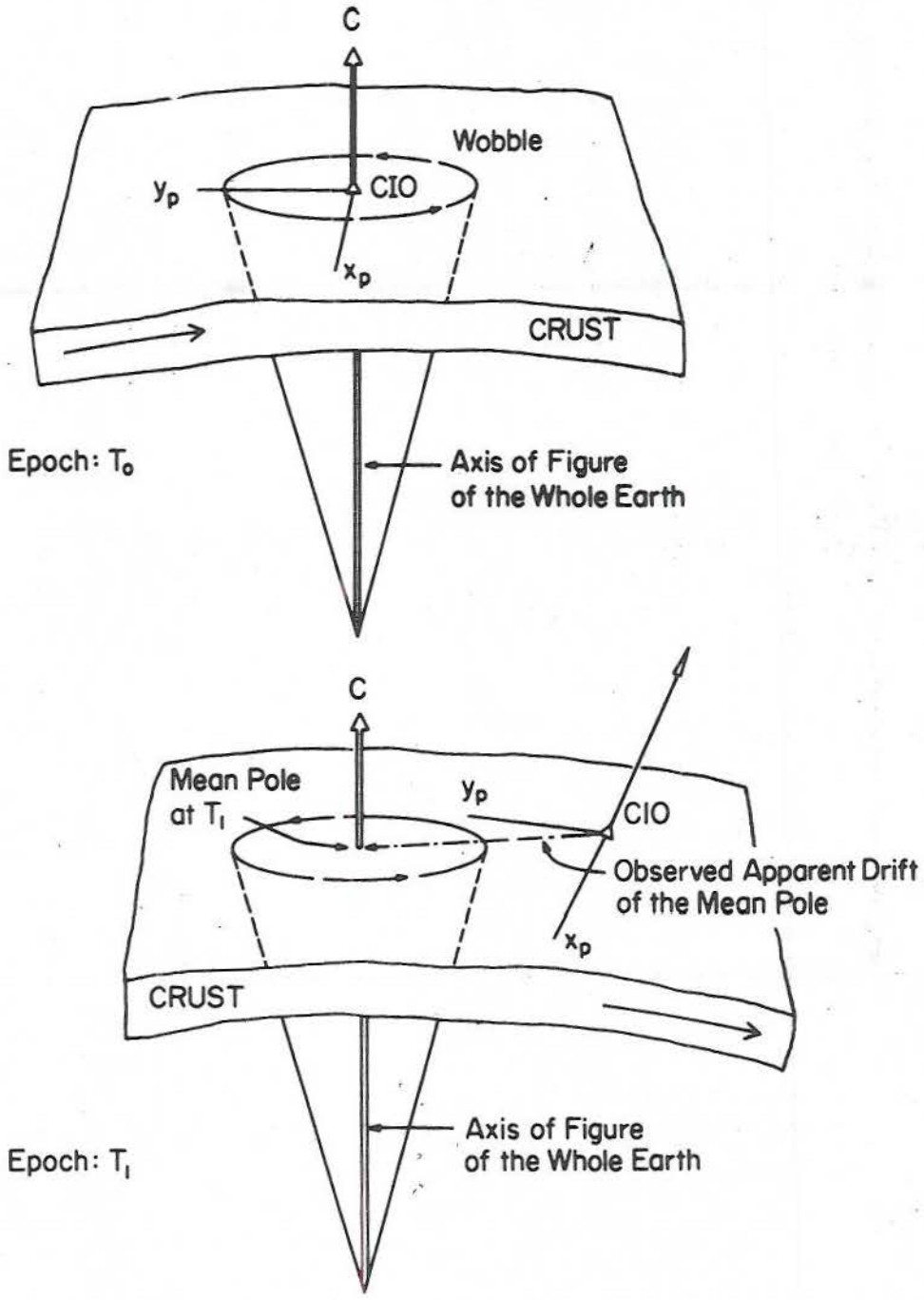


*Fig. 5 — Sliding of the Crust and Apparent Mean Pole Positions.*

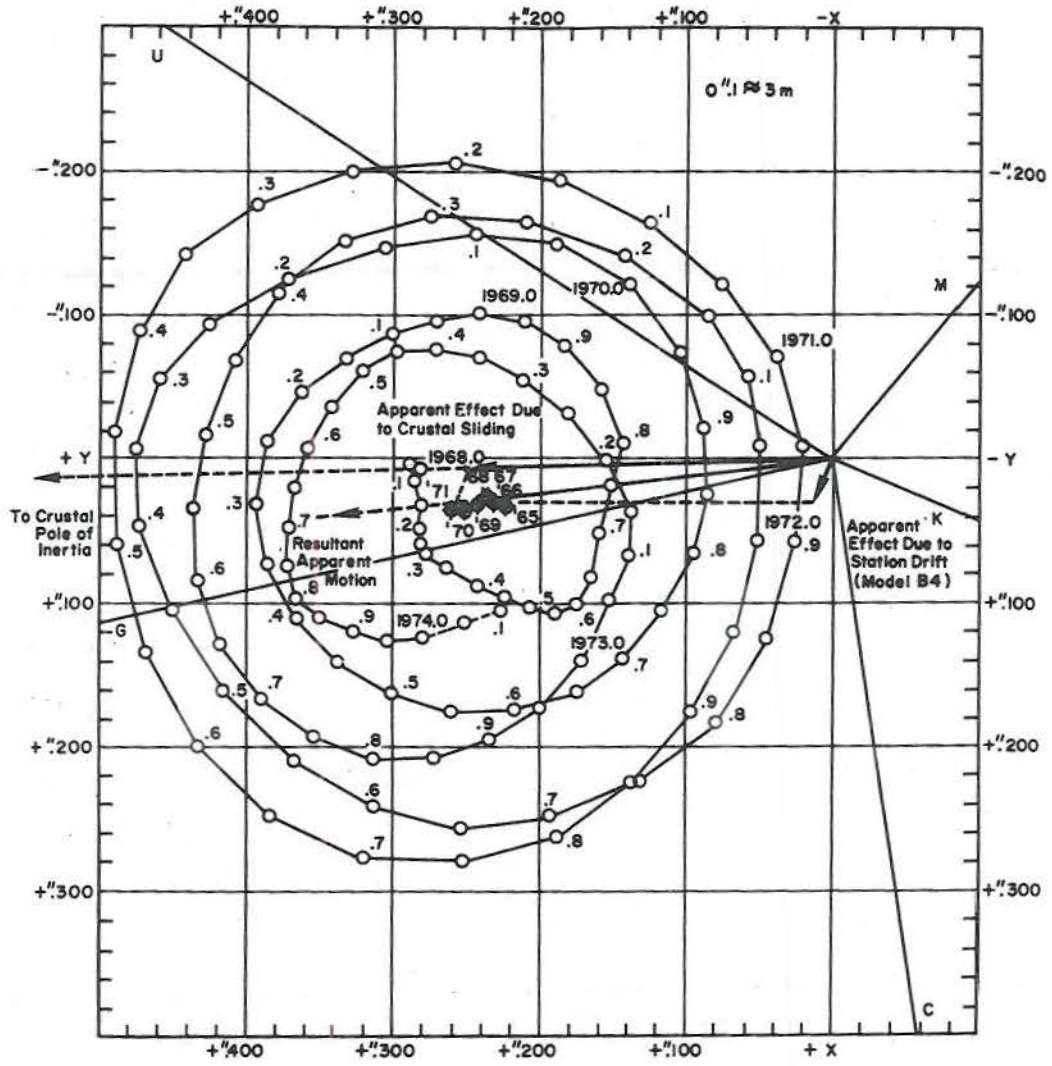


*Fig. 6 — Apparent Displacement of the Mean Pole over 70 Years Due to a Possible Combined Effect of Crust Sliding and IPMS Station Drift Superimposed on Polar Orbit from [Yumi, 1975].*

## Table 1

### Tensor of Inertia for Each Individual Plate and the Total Crust (50 Km Deep)

| Plate Name | No. | Tensor of Inertia $[I]_{Pi}$ | | |
|---|---|---|---|---|
| AFRICAN | 1 | 0.1549375040D+43 | −.5746112666D+42<br>0.3659923927D+43 | 0.1434525736D+42<br>0.2612359781D+42<br>0.3867953054D+43 |
| AMERICAN | 2 | 0.4566997943D+43 | 0.9976786627D+42<br>0.3779194901D+43 | 0.4988294053D+42<br>0.4785378215D+42<br>0.3395438508D+43 |
| ANTARCTIC | 3 | 0.3210393813D+43 | −.1098232871D+42<br>0.2846084920D+43 | 0.1450220562D+42<br>0.1623310808D+42<br>0.8904670153D+42 |
| ARABIAN | 4 | 0.1779691548D+42 | −.1181730137D+42<br>0.1646764506D+42 | −.7282012894D+41<br>−.7472999848D+41<br>0.2432130936D+42 |
| CARIBBEAN | 5 | 0.1953842879D+42 | 0.5040995506D+41<br>0.2981484370D+41 | −.1326980322D+41<br>0.4572475656D+41<br>0.2004365514D+42 |
| COCOS | 6 | 0.1941247325D+42 | −.1803535162D+41<br>0.9776718418D+40 | 0.3701302487D+40<br>0.2837705655D+41<br>0.1924269429D+42 |
| EURASIAN | 7 | 0.3306476155D+43 | 0.2195409745D+42<br>0.2544419075D+43 | −.3817562569D+42<br>−.9673486707D+42<br>0.2067458743D+43 |
| INDIAN | 8 | 0.2735879769D+43 | 0.3761912903D+42<br>0.1626619564D+43 | −.5571617214D+42<br>0.4907379365D+42<br>0.2958911977D+43 |
| NAZCA | 9 | 0.8188225755D+42 | −.4107306785D+41<br>0.1262283106D+42 | −.1381307608D+41<br>−.2244825863D+42<br>0.7465976881D+42 |
| PACIFIC | 10 | 0.2816670441D+43 | −.9297334383D+42<br>0.4787631572D+43 | 0.1782165703D+42<br>−.1343965475D+42<br>0.4950205370D+43 |
| PHILIPPINE | 11 | 0.1930333366D+42 | 0.1459722513D+42<br>0.1835853592D+42 | 0.6953150710D+41<br>−.7057441923D+41<br>0.2985204116D+42 |
| CRUST $\equiv [I]_c$ | | 0.1976512725D+44 | −.1656291368D+40<br>0.1975795564D+44 | −.6757155298D+38<br>−.4587592137D+40<br>0.1981162935D+44 |

NOTE : All tensors are symmetric and refer to the Terrestrial System.
The unit of each element is $g\ cm^2$ .

**Table 2**

**Displacement of the Polar Principal Axis of the Earth and Crust Due to Mass Displacements as a Consequence of Tectonic Plate Motions**

| Model * | | Total Earth | | Crust | |
|---|---|---|---|---|---|
| | | $x_0$ | $y_0$ | $x_c$ | $y_c$ |
| Name | Description | mm/100 years | | | |
| A3 | Uniform drag coefficient beneath all plates | 0.8 | −1.9 | 22.8 | − 99.9 |
| B3 | Drag beneath continents only | 0.5 | −1.8 | 13.5 | −101.3 |
| B4 | Continents have 3 times more drag than oceans | 0.7 | −1.8 | 19.1 | − 99.0 |
| C3 | Drag opposing horizontal translations of slabs, oceanic subduction zone only | 0.9 | −1.8 | 26.4 | − 96.0 |
| C4 | Same but including Arabian and Himalayan trenches | 0.8 | −1.8 | 25.4 | − 94.7 |
| D1 | Maximum pull by slabs plus plate drag | 0.8 | −1.4 | 24.2 | − 78.2 |
| E2 | Drag beneath 8 mid–plate hot spots | 0.9 | −1.3 | 34.9 | − 72.5 |
| E3 | Drag beneath 19 hot spots | 0.7 | −1.5 | 23.8 | − 84.9 |

* – From [Solomon et al., 1975].

## Acknowledgments

This investigation was supported through NASA Grant NGR 36–008–204. This paper was prepared while the second author, as the recipient of the Humboldt Prize, spent an enjoyable year in Munich with Professor Erik W. Grafarend as his host.

o

o o

## REFERENCES

M. BURŠA, 1970 : "Best–fitting Tri–axial Earth Ellipsoid Parameters Derived from Satellite Observations", *Studia Geoph. et Geod., 14,* 1–9.

E.P. FEDOROV, A.A. KORSUN and N.T. MIRONOV, 1972 : "Non–Periodic Latitude Variations and the Secular Motions of the Earth Pole" in *Rotation of the Earth,* Melchior, P. and S. Yumi (Editors), Reidel Publishing Co., Dordrecht, Holland.

E.M. GAPOSCHKIN, 1974 : "Earth's Gravity Field to the Eighteenth Degree and Geocentric Coordinates for 104 Stations from Satellite Terrestrial Data", *J. Geophys. Res., 79,* 5377–5411.

W.A. HEISKANEN and F.A. VENING–MEINESZ, 1958 : *The Earth and Its Gravity Field,* McGraw Hill, New York.

D.R. INGLIS, 1957 : "Shifting of the Earth's Axis of Rotation", *Rev. of Modern Physics, 28,* 9–19.

W.S. JARDETZKY, 1962 : "Aperiodic Pole Shift and Deformation of the Earth's Crust", *J. Geophys. Res., 67,* 4461–4472.

M. HOTINE, 1969 : Mathematical Geodesy, *ESSA Monograph 2,* U.S. Department of Commerce, Government Printing Office, Washington, D.C.

P. MELCHIOR, 1975 : "On Some Problems of BIH and IPMS Services" in *On Reference Coordinate Systems for Earth Dynamics,* B. Kolaczek and G. Weiffenbach (Editors), International Astronomical Union, Colloquium No. 26, Torun, Poland, Institute of Higher Geodesy and Geodetic Astronomy, Warsaw Technical University, Warsaw, and The Smithsonian Astrophysical Observatory, Cambridge, Massachusetts.

I.I. MUELLER, 1975 : "Tracking Station Positioning from Artificial Satellite Observations", *Geophysical Surveys, 2,* 243–276.

W. MUNK, 1958 : "Remarks Concerning the Present Position of the Pole", *Geophysics, 6,* 335–355.

W. MUNK and G.J.F. MACDONALD, 1960 : *The Rotation of the Earth, a Geophysical Discussion,* Cambridge University Press, London.

E. PROVERBIO and A. POMA, 1976 : "Astronomical Evidence of Change in the Rate of the Earth's Rotation and Continental Motion" in *Growth Rhythms and the History of the Earth's Rotation.* G.D. Rosenberg and S.K. Runcorn (Editors), John Wiley, New York.

A.E. SCHEIDEGGER, 1963 : *Principles of Geodynamics,* Academic Press, New York.

T. SOLER, 1976 : "On Differential Transformations between Cartesian and Curvilinear (Geodetic) Coordinates", *Dept. of Geod. Sci., Report No. 236,* The Ohio State University, Columbus, Ohio.

T. SOLER, 1977 : "Global Plate Tectonics and the Secular Motion of the Pole", *Dept. of Geod. Sci., Report No. 252,* The Ohio State University, Columbus, Ohio.

S.C. SOLOMON, N.H. SLEEP and R.M. RICHARDSON, 1975 : "Forces Driving Plate Tectonics : Inferences from Absolute Plate Velocities and Interplate Stress", *Geophys. J. R. astr. Soc., 42,* 769–801.

A. WEGENER, 1929 : Die Entstehung der Kontinents und Ozeane, Friedr. Vieweg & Sohn, Braunschweig or *The Origin of Continents and Oceans* (English translation), Dover, New York, 1966.

S. YUMI, 1975 : *Annual Report of the International Polar Motion Service for the Year 1973.* Central Bureau of the International Polar Motion Service, Mizusawa.

S. YUMI and Y. WAKO, 1970 : "Secular Motion of the Pole" in *Earthquake Displacement Fields and the Rotation of the Earth,* L. Mansinha, D.E. Smylie and A.E. Beck (Editors), Springer–Verlag, New York.

*Received : 18.04.1977*
*Accepted : 11.11.1977*



View publication stats